Worsted Preparing and Spinning.

(Drawing and Spinning).

BY

FRED BRADBURY.

FRANKLIN INSTITUTE
LIBRARY

The JAMES T. MORRIS

MEMORIAL
FUND

CLASS 677
BOOK B722
ACCESSION 102016

WORSTED PREPARING AND SPINNING.

(DRAWING AND SPINNING.)

PUBLISHED BY
F. KING AND SONS LIMITED,
HALIFAX.

WORSTED PREPARING

AND

SPINNING.

(DRAWING AND SPINNING.)

VOLUME III.

BY

FRED BRADBURY;

PROFESSOR TEXTILE INDUSTRIES, MUNICIPAL COLLEGE OF TECHNOLOGY, BELFAST;

AUTHOR OF "CALCULATIONS IN YARNS AND FABRICS," "CARPET MANUFACTURE," "JACQUARD MECHANISM AND HARNESS MOUNTING," "FLAX CULTURE AND PREPARATION," "WORSTED PREPARING AND SPINNING," Vols. I., II. and III.

PRICE 7/6 NET.

(*Copyright.*)

TO BE OBTAINED FROM
F. KING & SONS, LTD., PUBLISHERS HALIFAX.
AND ALL BOOKSELLERS.

CONS
TS
627
.73
900
1.3

PREFACE.

THE subjects dealt with in this volume are worsted drawing, including differential bobbin winding and mechanism, or cone drawing; French drawing; throstle spinning of the flyer, cap, and ring types; twisting; warp winding, and warping.

Two comparatively long chapters are devoted to the subject of mechanical doffers for flyer and cap frames, which will be found to be fully considered and extensively illustrated. The 54 pages of text and illustrations allotted to differential bobbin winding and mechanisms, and including a suggested series of deductions or laws governing epicyclic trains of differential gears of the oscillating type, will be found not only of technical interest but of considerable practical value in the understanding of these ingenious and complex pieces of mechanism.

The subject of bobbin building in throstle spinning, especially as regards spools for weaving, is pregnant with a large variety of useful problems, the study and solution of which are essential factors in its thorough and complete understanding.

The "lifter" mechanism is illustrated and described in detail, and numerous worked examples are given.

Drafts, doubling, progressive reduction, and twists are dealt with and their principles and objects closely analysed and explained.

A large number of problems dealing with material and machinery have been evolved and fully worked out to illustrate methods of solution and principles employed in the various sequences of processes and machinery operations, including relative speeds and their productive capacities,

Where a knowledge of the machinery employed is requisite to a proper understanding of the principles, processes, and objects involved, I have followed my usual plan of considering first the general object, function, and design of the machine; of next describing all the essential parts in detail of construction and relation to each other; and finally of explaining how these various parts work in unison or sequence to fulfil their objects and functions.

No effort has been spared, even at the risk of taking too much pains, to treat each important machine of the sequence in as complete detail as possible, compatible with space and importance, and so to make the subject more readily and easily understood. I have endeavoured to place the subject within the comprehension of those having but a limited technical knowledge, although an assumption of wider knowledge might have allowed of the passing over of troublesome details.

The contrasting of one principle, or of one method of presenting or applying a principle, with another—

102016

important factors in the production of any book—is a matter which has not been overlooked.

The book is the product of many years of practical experience, teaching, observation, study, and technical conversations.

I gratefully acknowledge the very valuable assistance rendered by my wife in the preparation of the book. She has prepared practically all the detailed drawings, in many cases from only rough sketches.

I am also much indebted to Mr. John Robinson, Denholme, who has been my court of appeal in regard to many practical details and has supplied numerous valuable items of information.

My thanks are due also to Messrs. Prince Smith & Son for endless facilities and loan of blocks; and to the printers, who have as usual spared no effort to produce a high standard of workmanship.

F. BRADBURY.

BELFAST.

CONTENTS.

	PAGES.
CHAPTER XXXVI	
Worsted Drawing	549–584
CHAPTER XXVIII.	
Fundamental Principles of Drawing and Spinning	585–603
CHAPTER XXXVIII.	
Drawing Operations and Reduction Calculations	604–626
CHAPTER XXXIX.	
Calculations on the Production of Drafts and Twists	627–646
CHAPTER XL.	
Relative Productive Capacity of the Drawing Boxes	647–656
CHAPTER XLI.	
Differential Bobbin Winding or "Cone Drawing"	657–681

CHAPTER XLII.

The Differential Mechanisms 682–710

CHAPTER XLIII.

French Drawing 711–728

CHAPTER XLIV.

Worsted Spinning 729–762

CHAPTER XLV.

Lifter Mechanism, Spinning and Twisting... 763–789

CHAPTER XLVI.

Worsted Yarn Calculations 790–797

CHAPTER XLVII.

Automatic Doffers 798–829

CHAPTER XLVIII.

Worsted Mule Spinning 830–838

CHAPTER XLIX.

Twisting 839–849

CHAPTER L.

Warping and Supplementary Processes ... 850–869

Vol. III.

CHAPTER XXXVI.

WORSTED DRAWING.

1. *Abstract of Preceding Vols.* 2. *Abstract—Drawing, Spinning and Twisting.* 3. *Object and function of Drawing.* 4. *Two Systems of Worsted Drawing.* 5. *Drawing Machines and variety of Operations.* 6. *Gilling in Worsted Drawing (Combed top).* 7. *Feeding from tops to gill drawing boxes.* 8. *Creel Feed Mechanism.* 9. *Object and function of Knocker-off Mechanisms.* 10. *Three Wheel or Candlestick Knocker-off.* 11. *Drawing boxes.* 12. *The Lifter or Builder Mechanism.* 13. *Drawing Box Knocker-off Mechanism.* 14. *Swing Creel Feed.* 15. *Arrangement of Feed for Reducers and Dandy Rovers.*

1. Abstract of Preceding Vols.

IN the processes detailed in Vols. I and II the objects have been to cleanse and free the wool from its natural impurities and manipulate it so as to produce a uniform sliver of combed and finished "top," consisting only of those fibres which are reasonably and approximately of equal length and more or less parallel.

2. Abstract—Drawing, Spinning and Twisting.

The finished top of the wool comber is the raw material of the worsted spinner. The finished yarn of the spinner may be either single or two-fold. Two-fold

yarns are usually required for warp and the single for weft, though two-fold yarns are frequently employed as weft, and occasionally single yarns are used for warp in the manufacture of specific types of cloth.

Drawing and spinning constitute the two chief divisions or processes of worsted spinning. Twisting two or more fold yarns may be considered an accessory to worsted or any other form of spinning.

The object of drawing and spinning is to reduce the combed top into a fine, strong, continuous and uniform thread, suitable for use as warp or weft in woven cloths or hosiery and other knitted fabrics.

3. Object and function of Drawing.

Drawing is the term used in the worsted trade to denote the process by which two or more slivers of the combed top are combined so as to reduce to a minimum any irregularities in the finished "tops" and simultaneously to attenuate the combined slivers to a degree of fineness which usually exceeds that of any one of the original slivers fed into the box. The former function is usually denominated "doubling" and the latter "drafting."

These processes are repeated in a series of drawing boxes until the resultant sliver, slubbing and rove are reduced to the required fineness, evenness and parallelism of fibre.

As the drawn sliver emerges from the front rollers of the can gill box it retains its untwisted ribbon formation.

In the next and all subsequent drawing operations the finished product is wound on to the barrel of wooden bobbins which are designed to receive a reasonable

quantity of slubbing or rove in the most convenient form for temporary storage, handling or immediate use, and protection against possible damage. The bobbin is systematically filled or built up by the process of winding the slubbing in uniform layers around the barrel whose diameter is consequently increased until it is co-equal with the diameter of the flanged ends of the bobbin. In this, and all like operations where the finished product from any machine is wound on to a bobbin, the material receives a limited amount of *twist* which imparts a rope or twine like appearance and to which the generic name of "*slubbing*" is usually given, whilst the finest strand of the drawing series of operations is denominated "roving."

The process of continued twisting, winding and building produces a gradual increase in the diameter of the bobbin, which incidentally involves an acceleration or retardation in its speed, according as to whether the bobbin leads or follows the flyer. The problems herein involved are numerous, interesting and complex. They should however be thoroughly understood if the work is to be satisfactorily accomplished. The mechanical and mathematical factors will be considered in a subsequent chapter.

The extreme delicacy of the wool fibres makes twisting and direct reduction of the combed sliver to the required fineness impossible. The combed sliver could, if desired, be immediately twisted into a thread, but the resultant diameter would be too great for any practical use. Attenuation must therefore be accompanied with doublings which assist to neutralise any irregularities of diameter.

Drawing therefore is, technically speaking, a combination of doublings and draftings supplemented by the introduction of a small amount of twist into the attenuated slubbing and rove, to impart cohesion among the fibres and a sufficient amount of strength as will enable it to be wound on to or drawn off a bobbin without breaking and also to exercise a restraining influence upon the individual fibres of the slubbing or rove in the subsequent operation of drawing whereby the individual fibres are straightened out to their relative maximum length and more perfect form of parallelism. If the twist is insufficient then the slubbing or rove will break ; on the contrary an excessive twist will retard the productive results pro rata and inversely to the amount of twist.

4. Two Systems of Worsted Drawing. There are two chief systems of worsted drawing :—(1) The English or Bradford system, and (2) the French or Continental system. Both embody the principle of continuous roller drafting.

The English system is substantially as already described, including the operation of imparting a slight amount of twist to the slubbing and roving strands.

This principle of preparing wool and of manipulating its fibres into *worsted* yarn is pre-eminent ; it produces the most typical and characteristic yarn and consequently is best suited to the production of those woven fabrics where smartness and superior definition of design or design and colour are most requisite.

In the French system the combed sliver is doubled and attenuated throughout the whole sequence of

drawing operations, but no twist is inserted into the material until the final operation of spinning on the "mule" is reached.

5. Drawing Machines and variety of Operations. The machines and number of operations designed to prepare the material for the worsted spinning frames are varied and numerous. The operations vary in number according to the number of spindles to be supplied, the class, quality, weight and condition of the material from which it is required to prepare and spin, also the weight of roving and counts or fineness of yarn necessary, and the purpose which the finished product has to serve, together with the ideas and idiosyncracies of the drawing master or overlooker.

The various machines and the sequence in which they are used for a typical botany wool are nominally as follows :—

I	1.	The can gill box	I
	2.	The gill drawing box	
II	3.	The drawing box	II
	4.	The weigh box	
	5.	The drawing box	
III	6.	The first finishing box	
	7.	The second finishing box	
IV	8.	The reducing box	III
V	9.	The roving box	

The above machines may be divided into three or five groups as shown by the brackets.

6. Gilling in Worsted Drawing (Combed top). This is the first process in worsted drawing to which the combed top is subjected.

At this juncture it is important to consider and examine the chief characteristics of the *combed top*. The tops are graded according to quality and conveniently expressed by the yarn number to which they will approximately spin. Fineness and length of fibre are the chief characteristics of quality and the primary considerations with the spinner. Other factors being equal those tops which possess the finest fibres are the most valuable and these fibres primarily determine the extent to which the tops can be prepared and spun because there must be some minimum number of fibres in the cross section of every *even* yarn and because being finer they relatively facilitate the manipulation of a greater number of fibres into the cross section of any given yarn number, and for this reason the strain to which it will subsequently be subjected will be distributed over a greater number of points; also the relatively greater number of fibres exercises a beneficial restraining influence on the drafting process.

The factors of relative length of fibre and uniformity of top are not only valuable at the commencement of the drawing series of operations, but they are fundamental characteristics which must be retained throughout all the subsequent drawing processes. When the tops are not uniform in length of fibre, they must be thoroughly mixed by a judicious blending in the preliminary gill drawing boxes.

At each operation in the drawing series a certain amount of breakage of fibres occurs. These should be kept within reasonable limits. The cause may be due to an improper adjustment of the back and front rollers,

or to an excessive amount of pressure on the front rollers, or twist in the slubbing or rove. Obviously the longer the individual fibres of the top, the greater will be the number of turns in the length of the individual fibres for the same number of twists per unit of length in the slubbing, etc., which incidentally demonstrates that the longest fibred wools require a relatively less number of turns per inch for any given size of slubbing, rove or yarn. Careful observations and tests should therefore be made and records kept of the behaviour of the tops and results obtained at the initial gilling and every subsequent operation of drawing, because the tops do not always work out as well in practice as their appearance and condition would suggest—excessive breakage of fibres sometimes occurs and also a sinkage in weight of material at every drawing operation. When a large proportion of short fibre is present it is continually thrown out as it leaves the nip of the front rollers and collects upon the wings of the flyers and other parts of the machine.

The object and function of gilling at this stage is to operate as many individual fibres as possible, to open the slivers so as to render the work of the rollers easier in the drawing boxes, to complete as thoroughly as possible the mixing of the long and short fibres that remain in the *finished* top, as well as to reduce the sliver to a more level and finer state and the fibres into as parallel a form as possible.

This is most necessary when the tops have been kept in stock for any considerable length of time because

then, the fibres have become "set," adhering very closely to each other and manifesting a stiff and wiry character, presumably due to the evaporation of the oil previously used in the process of combing which left a residue of resinous substances attached to the fibres.

In the first operation the drawn sliver is delivered in ribbon form and without any twist into a can.

The prime factor to be borne in mind is, how may a *sound* roving be prepared which will spin well. Much difference of opinion exists in respect to the amount of gilling necessary in the drawing series. In former days as many as three or four gill boxes were used as a preliminary to drawing. These have now been reduced to a maximum of two boxes—a reduction which judged by experience is evidently correct, since too much gilling of wool tends to damage the surface of the fibres and thereby reduces its spinning properties. Apropos this point, some worsted spinners claim to have discovered an advantage in this direction by reducing the number of pins in the fallers and also the number of fallers per box. It may be right and necessary in the case of wool combing to adopt the finest possible setting of the pins in the comb circles as as to most thoroughly and individually treat as many fibres as possible and to arrange them in their most proper and parallel form to each other. When these objects have been attained nothing more can be gained by pursuing the process any further. For economical reasons the drawing should be done with as few operations as possible compatible with the production of a sound roving.

7. Feeding from tops to gill drawing boxes.

The feed of the gill drawing boxes was formerly supplied from one or other of the following methods :—(a) From the centre of the tops which were placed on the floor ; the simplicity of this method is outweighed by the disadvantage of imparting one turn of twist into the sliver for every internal wrap taken from the ball and since the lengths from the first to the last wrap are constantly increasing, a varying amount of twist is introduced into the sliver as it is being fed into the back rollers.

(b) Wooden spindles were sometimes forced through the different tops and these were subsequently placed in a rack. The sliver was then drawn from the periphery of the tops. Whilst this method did not put in any twist, it introduced a certain amount of tension on the sliver from the full to the final wrap on the barrel, due to the decreasing weight of the top and radial leverage. Another defect of this method was the possible damage to the top when the wooden pegs or barrels were being inserted.

(c) A third method consisted of unwinding the sliver from the tops into cans. This plan, while it obviated the defects of the two former methods, entailed the extra labour of unwinding the balls and involved the risk of feeding from the wrong end and subsequent irregular drafting of the sliver.

8. Creel Feed Mechanism.

The modern method of feeding the gill boxes is from the outside of the tops which are placed in frictional contact with a pair of rotating rollers of uniform surface velocity,

so that whatever may be the diameter of the tops from which the sliver is being unwound, the surface speed will be exactly the same and any tension, though practically nil, will also be constant.

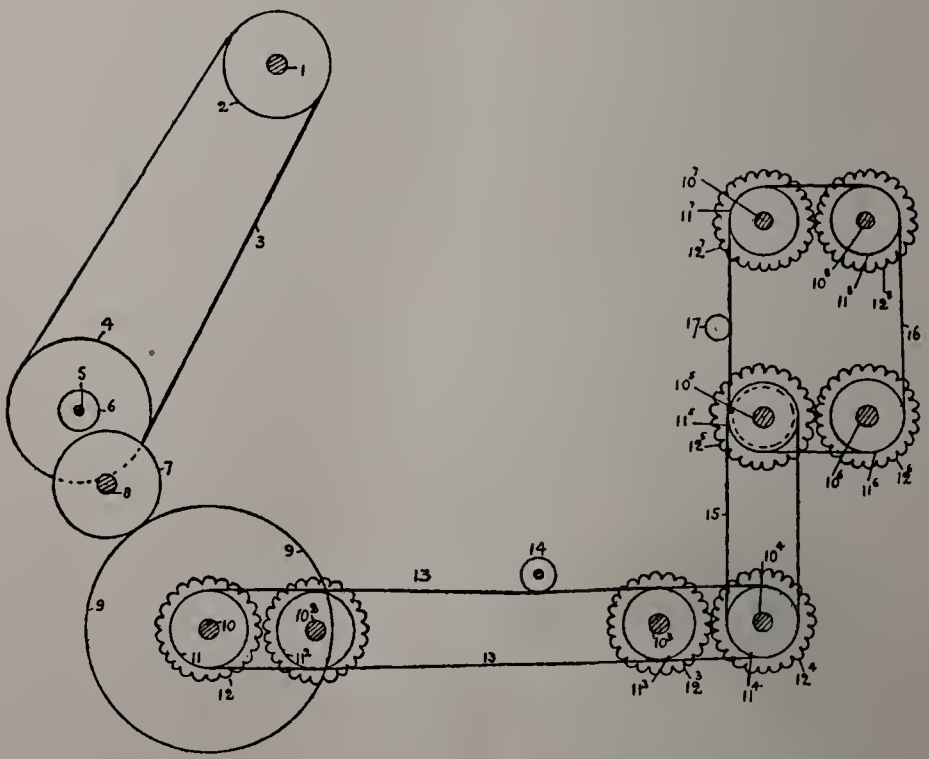

Fig. 232.

Figs. 232 and 233 show in sectional elevation, the construction and arrangement of the chief mechanical details for the support and continuous rotation of the creel rollers, on which the tops (12 for this creel) are supported and positively rotated.

The former figure shows the arrangement of the operating mechanism and the latter figure, part of the

same mechanism together with the tops in operative position. The details of these illustrations are from

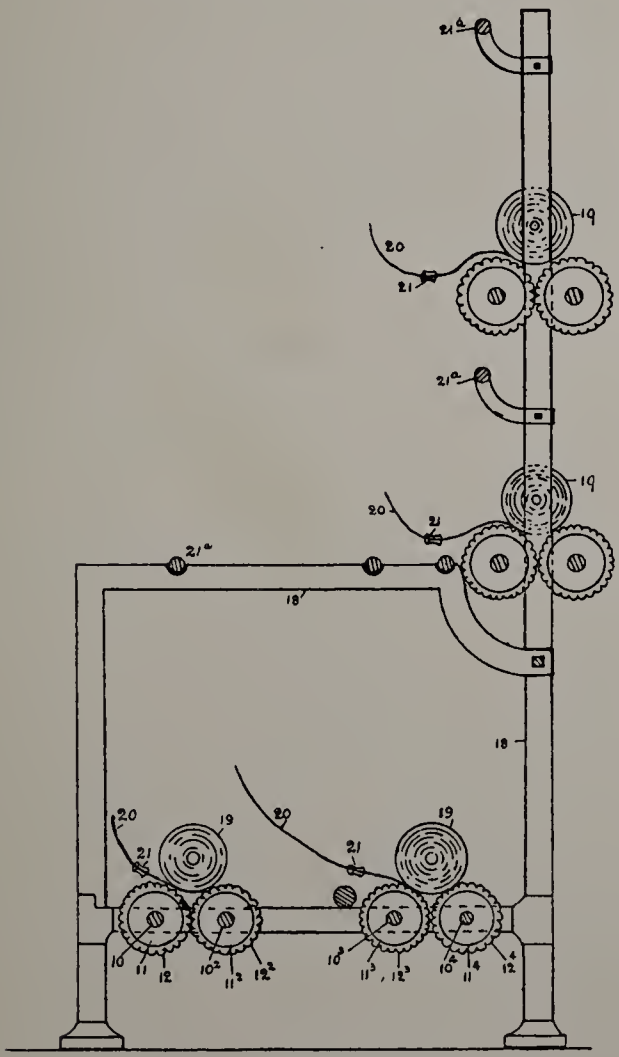

Fig. 233.

a creel made by Messrs. Prince Smith & Sons and designed to carry 12 balls or tops.

Fig. 234 is a sectional elevation for a ball creel for 32 tops.

Similar numerals in each diagram refer to corresponding parts of the mechanism.

The primary motion is derived from the back shaft of the first can gill box as indicated by the numeral 1 and a driving pulley 2 fast to the same shaft. 3 is a belt, connecting pulley 2 with a pulley 4 on a stud shaft 5, supported in a bracket adjustably fastened to the gable 18. A spur pinion 6 is compounded and free to rotate in sympathy with the pulley 4 and communicates rotary motion through an intermediate stud wheel 7 on stud 8 compounded with a bracket suitably adjusted to the machine gable 18.

The teeth of the intermediate stud wheel 7 intermesh with those of a large spur wheel 9 compounded with a shaft 10 with which also is compounded a sprocket chain wheel 11 and a corrugated roller 12. Duplicates of the shaft 10, chain wheel 11 and roller 12 are respectively shown at 10^2 to 10^8, 11^2 to 11^8 and 12^2 to 12^8. A sprocket chain 13 combines with and communicates motion to the sprocket chain wheels 11^2, 11^3 and 11^4. An adjustable tension pulley 14 serves to keep the chain 13 in operative contact with sprocket chain wheels. A sprocket chain 15 connects and communicates motion from the chain wheels 11^4 to 11^5 and similarly a chain 16 combines and conveys rotary motion from the chain pulley 11^5 to 11^6, 11^7 and 11^8 and a small tension pulley 17 serves to keep the chain in operative contact with the sprocket wheels.

The combed tops 19, are placed in periphery contact with the corrugated rollers 12, which work in pairs

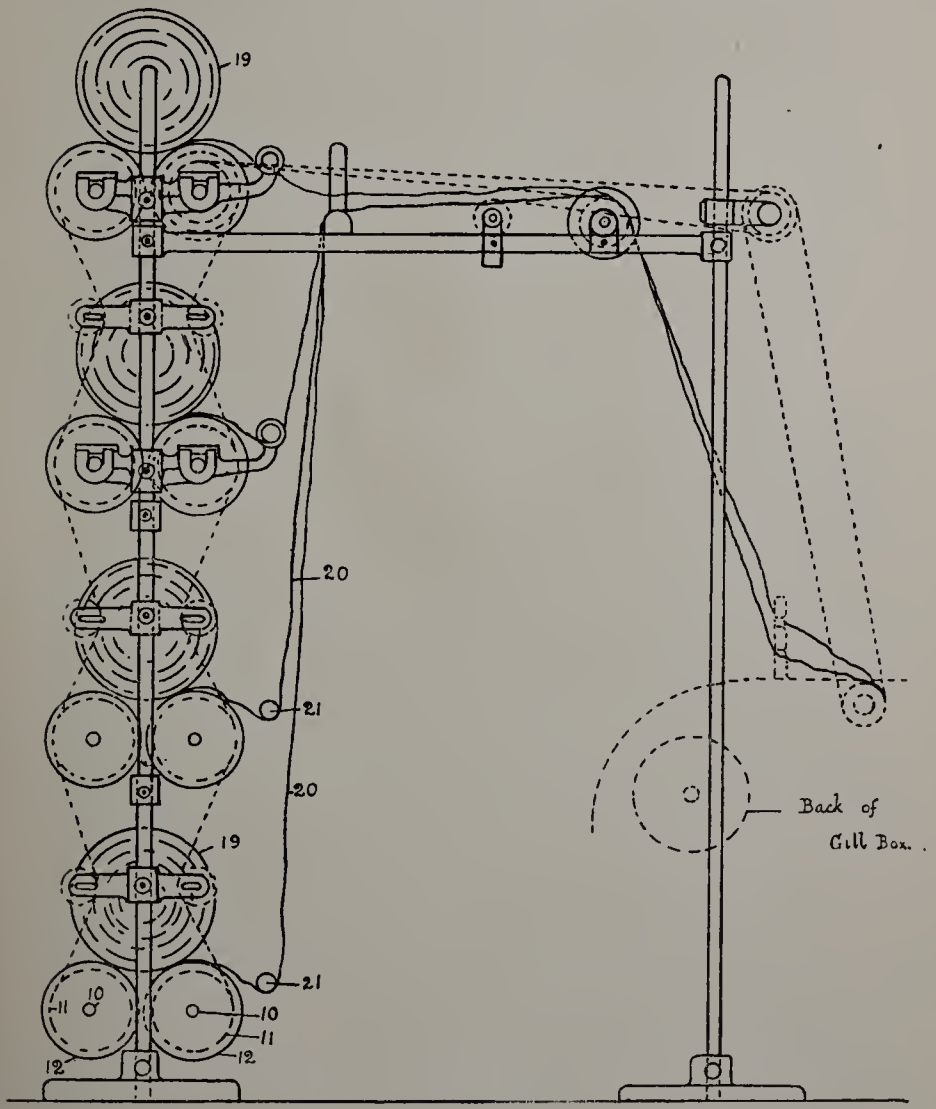

Fig. 234.

as shown and rotate through the simple mechanism already described at a slow, positive and uniform rate.

The slivers 20, are passed forward, in contact with, and directed by the loose rings 21 and guide rods 21*a*, to the nip of the back rollers of the first can gillbox.

The surface speed of the tops is constant and uniform like that of the corrugated rollers with which they rotate in contact and whose velocity may be modified at will to suit the different kinds of material and rate of feeds required.

Fig. 235 is a perspective view of a single can gill box.

Fig. 236 is a line diagram showing a transverse section through the rollers and gills of a can gill box.

A, is a smooth steel plate over which the combed sliver is fed ; B, a pair of back or feed rollers ; C, the top row of fallers each of which contains two rows of gills or pins ; D, a pair of drawing and delivery rollers ; E, a guide bar for the sliver ; F, a funnel which directs the sliver between a pair of rollers G, usually denominated the press rollers ; H, the sliver ; and I the can into which it is deposited.

In a second and subsequent operation of the spindle gill box, about six slivers are fed into the machine per spindle. Both machines consist essentially of two pairs of rollers with a set of fallers operating between them. As the sliver emerges from the front roller it receives a slight twist and is simultaneously wound on to a bobbin by means of a spindle and flyer. The can and spindle gill boxes are provided with the "candle stick" knocker-off motion.

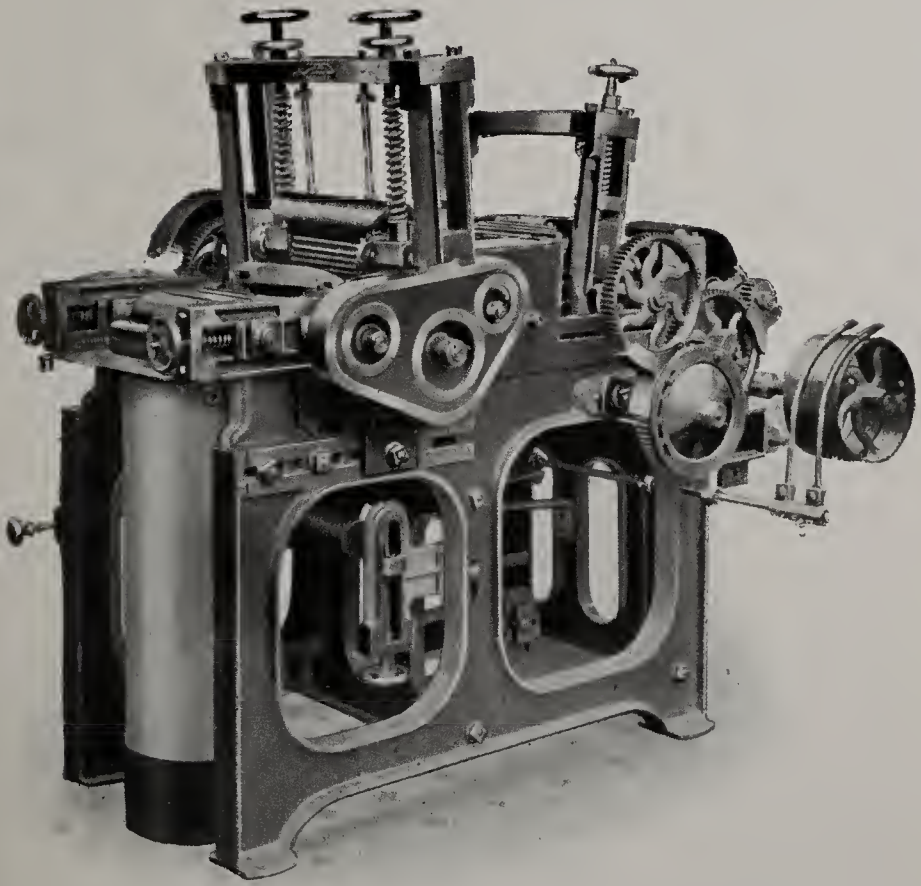

Fig. 235

SINGLE CAN GILL DRAWING BOX

9. Object and function of Knocker-off Mechanisms.

It has been previously emphasised that the supreme object in worsted spinning is to produce a yarn relatively uniform throughout its length. Absolute regularity implies *first* that the component fibres must themselves be perfectly regular, *second* that they must be exactly of the same length and *third* that any transverse sections of the ultimate thread must each contain

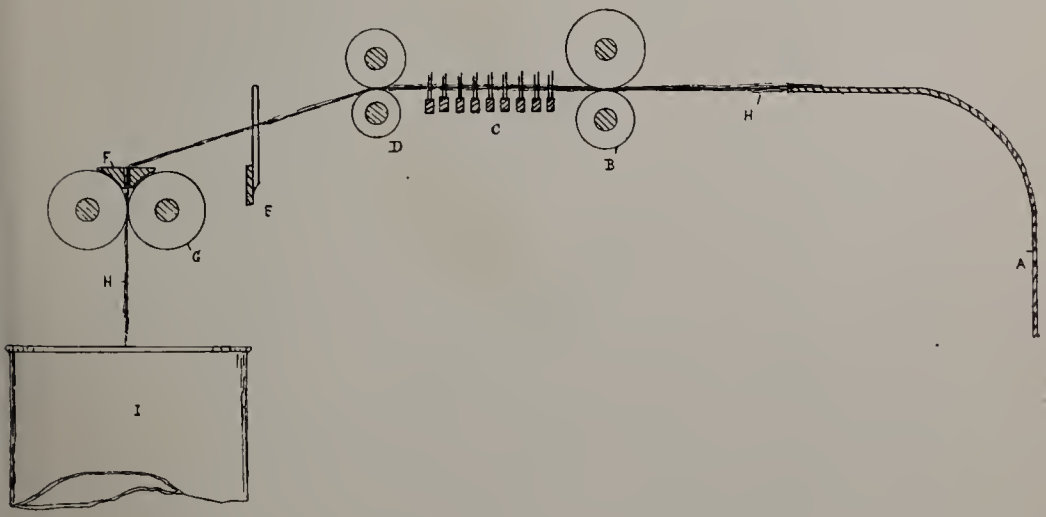

Fig. 230.

exactly the same number of fibres. Theoretically these objects may be ideal, but practically they are impossible of attainment. The extent of any irregularities is in a great measure dependent upon the methods adopted in the preparatory stages of manipulation and the character of the machinery employed. In order finally to approach even approximately to an equal distribution of the fibres it is necessary to work for this object from the earliest opportunity. In the drawing processes and

every operation preceding actual spinning everything which tends to increase the regularity of the subsequent yarn should be adopted and every means employed to detect any irregularities of sliver or slubbing that may have been allowed to pass forward from the preparing and combing operations.

In worsted drawing, apart from the necessary drafts and doublings and the exercise of careful attention on the part of the employees, auxiliary apparatus, usually denominated "Knocker-off" mechanisms, are employed, the function of which is to immediately and automatically stop the drawing box whenever a definite length of sliver or slubbing has been delivered. Next the net weight, of the sliver in the cans of the first can gill box or slubbing of the first drawing box, is ascertained, after which the cans or bobbins are weighed and arranged in sets of 4, 5 or 6 to suit the number of ends up, at the respective succeeding box. The cans or bobbins are assorted so that the total net weight is equivalent to some standard or predetermined weight of sliver or slubbing.

Two types of mechanism are usually adopted to attain the above objects—the "candlestick" or *three* wheel knocker-off and the *five* wheel or drawing box knocker-off. The former is usually applied to the first can and two spindle gill drawing boxes and the latter to the first drawing or slubbing frame usually denominated the "weigh box." The five wheel knocker-off is more complex than the candlestick but it affords a greater latitude for making alterations in the length of material delivered.

10. Three Wheel or Candlestick Knocker-off.

This knocker-off as applied to the first can gill drawing box is illustrated in its detached form at Fig. 237. A is a worm wheel, the teeth of which intermesh with those of a single worm compounded

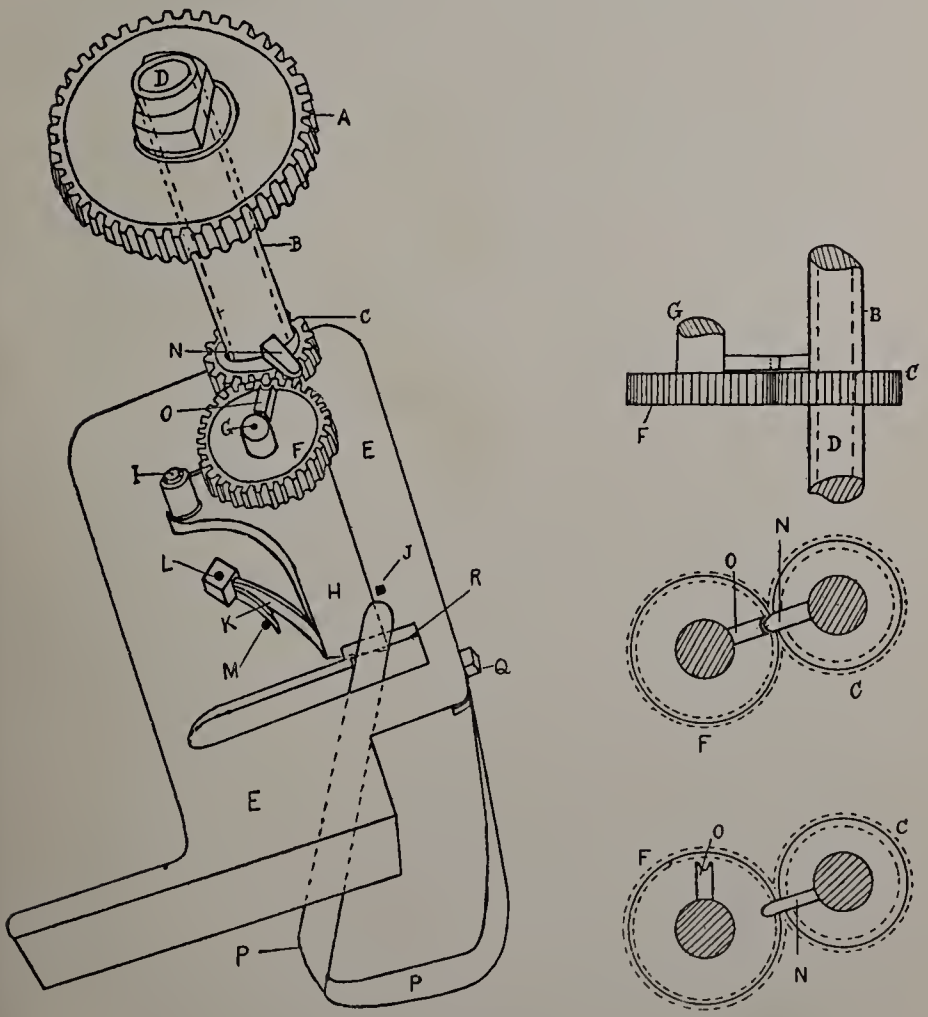

Fig. 237.

with the front roller shaft of the gill drawing box. The

wheel A is the change wheel and is fastened to the top of an upright socket B, to the bottom of which a small spur socket wheel C, is compounded. The socket B is supported and free to rotate on an upright stud D, in turn adjusted to a base plate E, to which all the other operative parts of the motion are attached. The base plate E, may be adjustably fixed to the gill box so that the change wheel A, is in operative contact with the worm on the front rollers.

The teeth of the spur pinion C, intermesh with those of a second spur wheel F, freely mounted on a stud G, in turn adjusted to a small bell crank lever H, which is mounted and free to oscillate on a stud I, which is securely compounded with the base plate E.

The amount of oscillation, counter-clockwise, of the lever H, is limited by the small stud J, fixed in the base plate E. A strong spring K, pivoted on the stud L, fixed to plate E, is adjusted under compression between the lever H and a small stud M, fixed in plate E. The potential energy of the spring K, operates to keep the teeth of the wheel F, in gear with those of the pinion C. The wheel F, is denominated the "knocker-off wheel." A steel peg N, is fixed in the socket B, immediately above the face of the pinion wheel C, and projects slightly beyond the teeth of this wheel. A second V-grooved steel peg O, is fixed in the face of the knocker-off wheel F, and which also projects slightly beyond the spur teeth of this wheel.

A strong steel spring P, fixed in operative contact with the belt fork is fixed at one end of the base plate E,

by means of a set screw Q. The free end of the spring P, operates within the recessed parts R, in the base plate E. A notched recess S, is formed near one end of the space, R, into which the steel spring P, may be compressed at will, when the gill box is in operative action.

The number of teeth in the two wheels C and F, are prime numbers, i.e. they are indivisible into each other without a remainder and consequently the teeth can never meet in the same relative positions from which they start until each wheel has revolved a number of teeth equivalent to the product of the numbers of the teeth in the two wheels and which in this example is the least common multiple.

The projecting teeth N and O, are so fixed that they cannot intermesh when adjacent, but meet exactly, point to groove, when each wheel has rotated a number of times divisible into the least common multiple. In this example the pinion wheel C, contains 29 and the knocker-off wheel F, 39 teeth, therefore the latter must rotate $\frac{29 \times 39}{39} = 29$ times before the two pins meet and conversely the pinion wheel C, and change wheel A, must rotate 39 times.

Whenever the two pins meet, the pressure of them upon each other, is such that the wheel F, operating through the stud G, oscillates the bell crank lever H, clockwise about the stud J a distance sufficient to force the starting or steel spring lever P, from the notched recess S, which, when released, operates through its connection to move the driving belt from the fast to the loose pulley and automatically stops the machine.

The complete details of the foregoing problem are as follows :—Circumference of bottom front roller of gill box 12½ inches ; worm on same—single ; change worm wheel, A, 40 teeth ; socket wheel, C, 29 teeth, and knocker-off wheel, F, 39 teeth. Then the total length of sliver delivered into the can before the machine is automatically stopped is as follows :—

Length of Sliver in can, in yards=

$$\frac{\text{Circe. of Ft. roller } 12{\cdot}5'' \times \text{Change Wheel A. } 40 \times \text{Socket Wheels C \& F. } 29 \times 39}{\text{ins. per yd. } 36 \times \text{Wheel C. } 29} = 541\tfrac{2}{3} \text{ yds.}$$

By omitting the value of the change wheel from the equation and then reducing all the remaining factors, which are constant, to one simple equivalent, a standard number is obtained which is usually denominated the gauge point thus :—

$$\text{G.P.} = \frac{12{\cdot}5 \times 29 \times 39}{36 \times 29} = 13{\cdot}54.$$

Then to find the required change wheel divide the G.P. into the predetermined required length, and conversely, the product of the G.P. and change wheel will indicate the drawn length, at the moment the machine automatically knocks off.

Construction and Action of the Drawing Machines.

11. Drawing boxes. The group of machines which usually constitute the drawing series proper may be particularised as follows :—The two, four, six and eight spindle drawing and six,

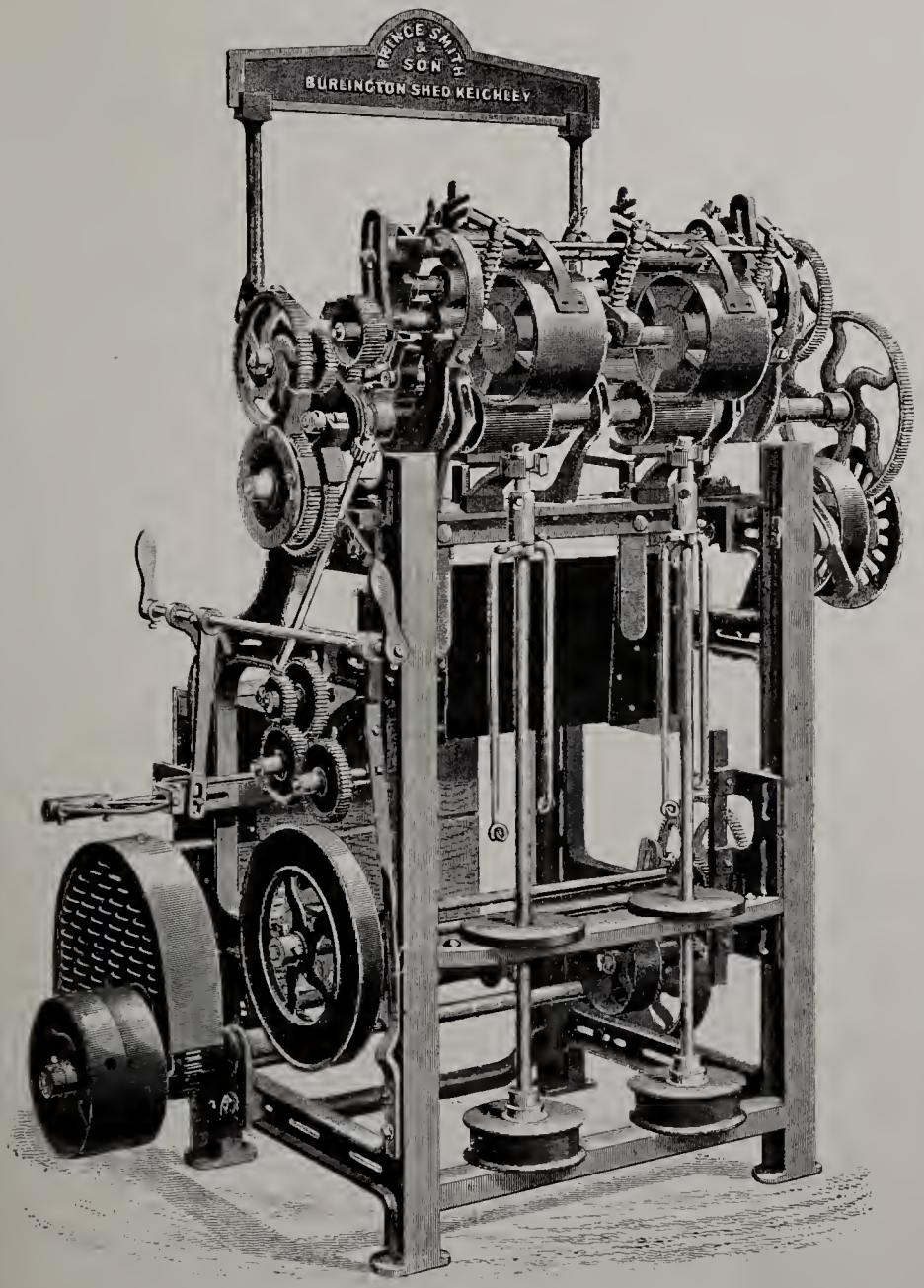

Fig. 238.

TWO-SPINDLE GILL DRAWING BOX

eight or more spindle finishing boxes ; the first is usually provided with a knocker-off and the second is denominated the weigh box. The object, construction and function of each machine is relatively the same. They are reduced in strength and vary in dimensioned details as the work proceeds. Each machine performs three distinct functions, which are continuous and successive. It drafts the " ends " and thereby reduces their thickness, next it imparts twist to the drafted ends and then winds them on to a bobbin. The drawing boxes consist primarily of two pairs of rollers supplemented with two or more sets of smaller rollers denominated carriers which are located and operate between the back and front rollers. They are introduced as substitutes for the fallers of the previous boxes.

Fig. 238 is a perspective view of the *two* spindle drawing box. It is the first machine which receives the material into the back rollers in the form of slubbing and strictly speaking is the first real drawing machine through which the wool passes and is perhaps the most important operation in the series, preparatory to the formation of a thread. Briefly recapitulated and summarised it reduces the strands of the combined slubbing so as to obtain the required smaller number of fibres in the cross section, then twists and winds them on to the bobbin.

Fig. 239 shows, in sectional elevation, the essential features and relations of the back and front rollers, intermediate carriers, spindle and bobbin, and method of driving all these, and also the direction of the traverse of the slubbing from the feed rollers to the bobbin.

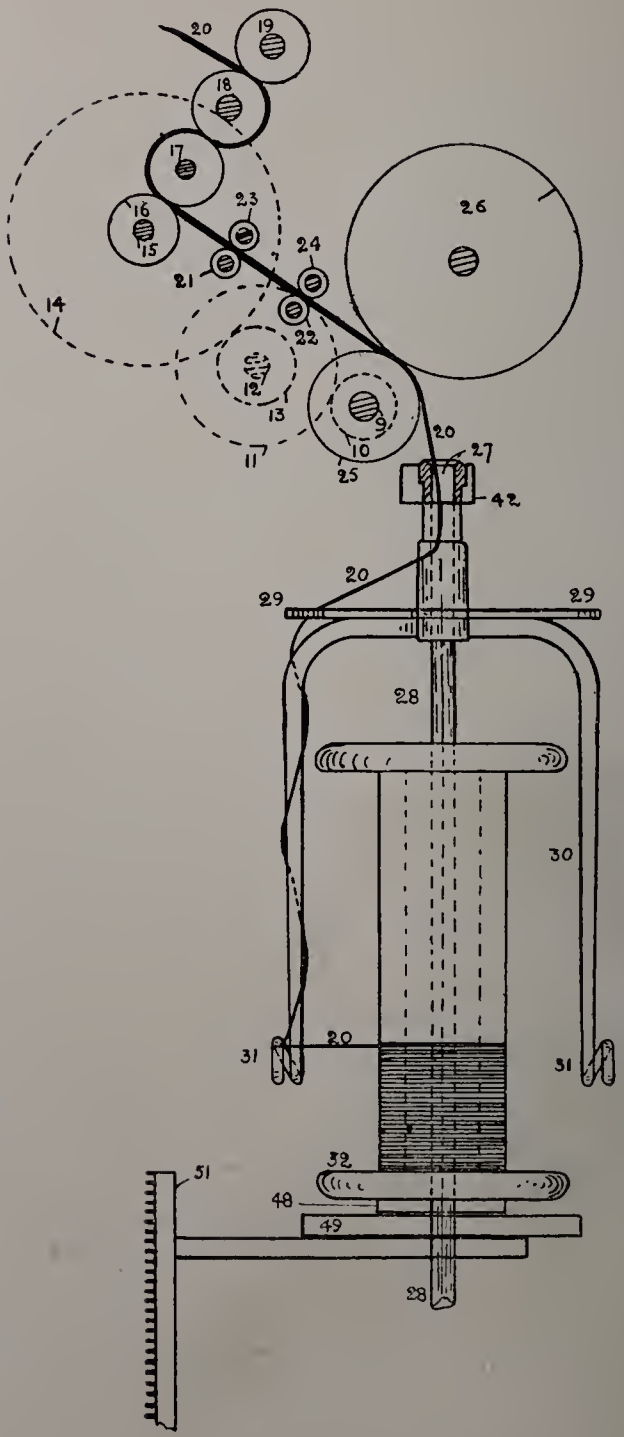
20
19
18
17
16
15
23
24
21
22
14
26
12
13
9
10
11
25
20
27
42
20
29
29
28
30
31
20
31
32
51
48
49
28

Fig. 239.

Fig. 240 is a part elevation in section, drawn to illustrate the method of driving the spindles and the front rollers, and incidentally supplies the data which it is necessary to alter whenever the twist requires to be modified.

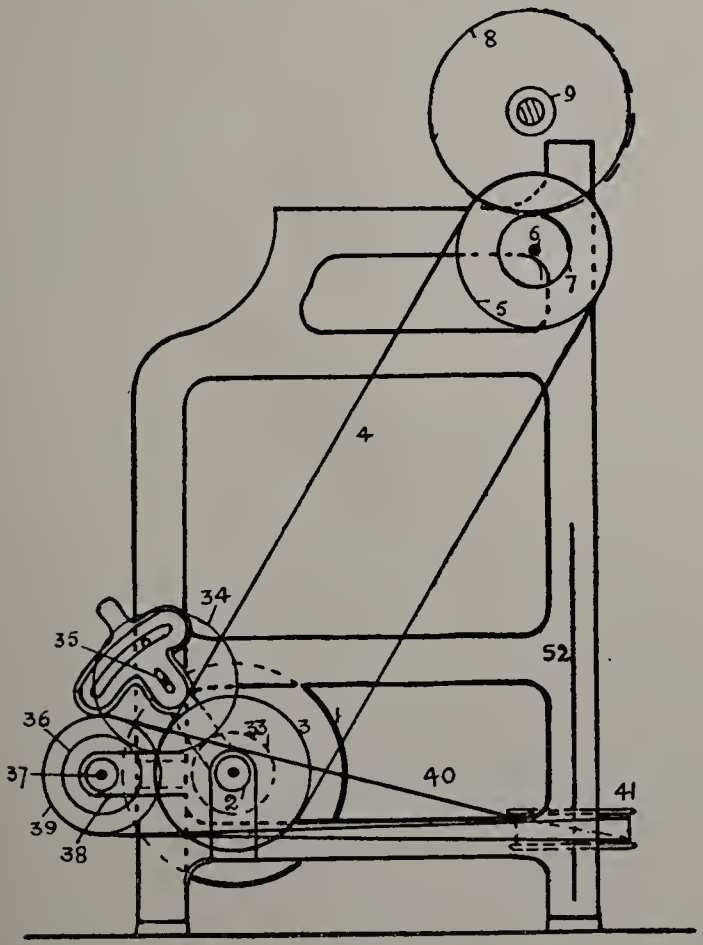

Fig. 240.

Fig. 241 is an alternative arrangement to Fig. 240. In this arrangement the spindles and rollers are driven from the same shaft whilst in the previous figure they are shown to be driven from two separate shafts.

The same numerals in Figs. 238 to 241 refer to similar parts. 1 indicates the fast and loose pulleys on the shaft 2, which for the purposes of reference may be denominated the frame shaft and from which all other

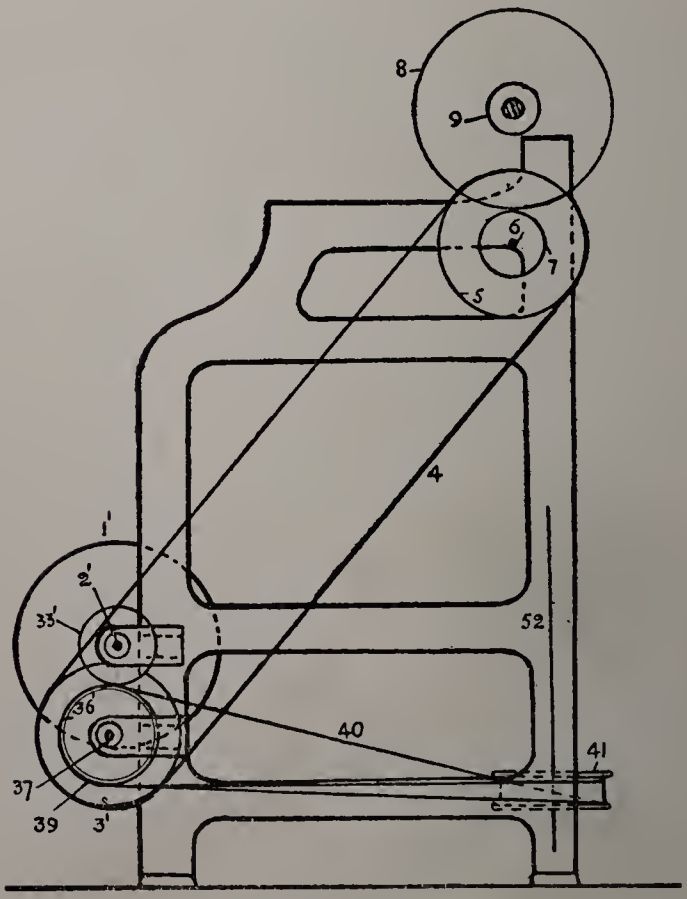

Fig. 241.

parts of the machine receive their motion. At the opposite and right side of the machine a pulley 3 (Fig. 240), is fastened to the shaft 2 and through the medium of a belt or chain 4, it combines and communicates rotary motion to a pulley 5, on an adjustable stud 6. Com-

pounded with the pulley 5, is a stud pinion or *change* wheel 7, the teeth of which intermesh with those of a large spur wheel 8, fastened to the end of the front roller shaft 9.

Reverting to the left and opposite end of the shaft 9 (Fig. 239), a spur change pinion 10, is fastened, the teeth of which intermesh and drive a stud wheel 11, free to rotate on the adjustable stud 12. Compounded with the stud wheel is a stud pinion 13, the teeth of which gear into and drive a large spur wheel 14, securely fastened to the back roller shaft 15. The feed or back roller is indicated at 16 and the three pressing and retaining rollers at 17, 18 and 19. The combined sliver from the feed creel is shown at 20 from whence the direction of its traverse to the flyer and bobbin is indicated. 21 and 22 are the second and first rows of steel carriers which are positively driven from the back rollers. Resting and rotating in frictional contact with these carrier rollers are wooden tumblers or carriers, 23 and 24 respectively. 25 is the boss, front or drawing roller compounded with the shaft 9, and 26 is the press or top roller, the surface of which is covered with leather. The front rollers have fixed centres but the back rollers and carriers are supported in rack bearings on which they may be *individually* moved nearer to, or remote from, the fixed front rollers, designed primarily to meet the requirements of different kinds and lengths of wool.

The carriers are introduced to replace the fallers of the previous boxes which cannot now be used, because of the twist which is in the slubbing.

As the drawn slubbing 20, emerges from the nip of the front roller it passes through a perforation 27, in the top centre of the spindle 28, from whence it is directed to either of the eyelets 29, formed in the shoulder of the flyer 30. The flyer is constructed with two arms or wings around either of which the slubbing may be wrapped once or more before being passed through the ring 31, which serves to conduct it to the bobbin 32. The flyer 30, is compounded with the spindle 28, in all the drawing boxes up to and including the finishers, but for the reduced and roving frames the flyer is adjustably fixed to the spindle and may be detached at will. In all cases the flyer and spindle rotate in sympathy.

Reverting to the details of mechanism which communicate motion to the spindles a spur pinion 33, is compounded with the shaft 2 (Fig. 240). The teeth of wheel 33 intermesh with those of an intermediate spur wheel 34, carried by an adjustable bracket and stud 35. The wheel 34, gears into a spur pinion 36, called the twist change wheel; it is fastened to a shaft 37, denominated the spindle driving shaft and carried in the bracket arm 38. Compounded with the shaft 37, is a small belt pulley 39, from which a belt 40, communicates rotary motion to a flanged pulley 41, termed the spindle pulley in turn compounded with the footstep of the spindle. The spindle passes through the builder or lifter plate. The bottom end of the spindle which is square fits into a square hole of like dimensions in the footstep projecting above and compounded with the flanged pulley 41. The top or head of the spindle

is carried in a clasp or detachable bearing 42, to facilitate subsequent removal or doffing. Many ingenious devices have been introduced to make the spindles absolutely rigid both at the top and bottom ends in order to ensure the maximum speed of spindle together with ease of detachment whenever it is necessary to remove the spindle to release the bobbin.

12. The Lifter or Builder Mechanism. The Builder or Lifter Mechanism is designed for the purpose of distributing in even and continuous layers, the drawn and twisted slubbing, over the barrel of the bobbin 32, during the process of filling.

The essential features of the mechanism are illustrated in the detached diagram, Fig. 242. The same numerals in this and all diagrams from Figs 238 to 244, inclusive, refer to like details of mechanism.

The bobbin 32, fitting loosely on the spindle 28, rests freely on a felt washer 48, which primarily serves to retard any undue rotation. The washer and bobbin and like duplicates are supported by a steel bar or plate 49, usually denominated the lifter plate or builder.

The plate 49, is compounded with a projecting arm 50, which forms part of a toothed rack 51, which in turn is supported and free to reciprocate in contact with the machine gables 52 and 53, Fig. 240. A rack pinion 54, is fast on the shaft 55, which latter extends the full width of the machine and carries near its opposite end a duplicate of the rack pinion 54. The teeth of the rack pinions 54, gear into those of the racks 51, on their respective sides. Compounded with the shaft 55, is a large wheel

56, usually called the mangle wheel and it rotates alternately clock and counter clockwise. It is usually constructed with strong steel round pegs, in lieu of

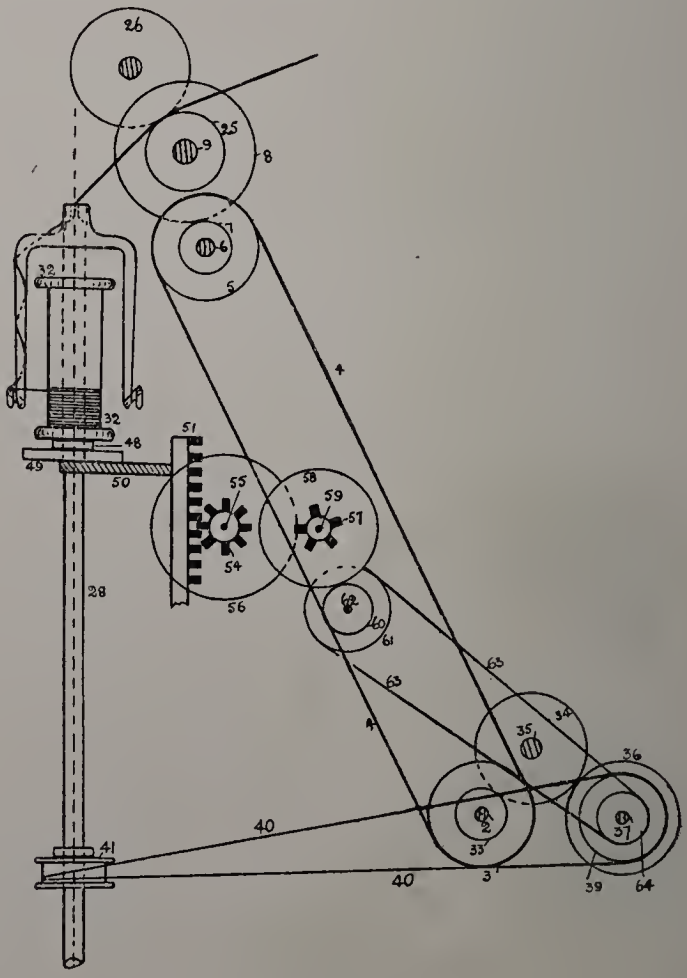

Fig. 242.

teeth, which project from one side of the wheel. These pegs or teeth of the mangle wheel are intermeshed by the teeth of a small but strong wheel 57, frequently

called the star wheel. The mangle wheel 56, and star wheel 57, are so designed that the latter rotates alternately externally and internally with the pegs of the former or mangle wheel. A space approximately equivalent to the absence of two or more teeth in the mangle wheel facilitates this operation. The star wheel is compounded with a stud wheel 58, both of which are supported and free to rotate on the fixed stud 59. The

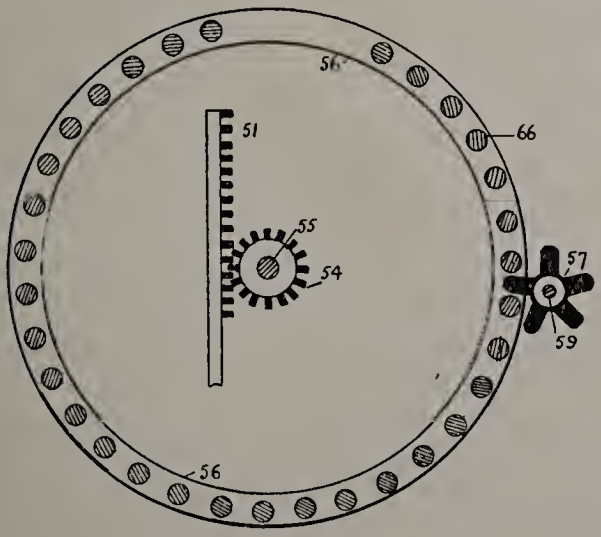

Fig 243.

Fig. 244.

teeth of the wheel 58, are intermeshed with and driven by a stud pinion 60, compounded with a pulley wheel 61, both of which are supported and free to rotate in an adjustable stud 62. A belt 63, combines the driven pulley 61, with the driving pulley 64, keyed fast to the spindle pulley shaft 37, and from which source the initial and continuous rotary and reciprocating motions, respectively, and already referred to, are produced in conformity with the foregoing requirements.

Side and end elevations of the mangle wheel are shown at Figs. 243 and 244.

The action of the mechanism is simple. The train of wheels 64 to 57 inclusive are rotated continuously through their connections as described. The teeth of the last continuous rotating wheel operate externally and internally with those of the mangle wheel as described and thereby produce the alternating rotations of the mangle wheel 56, and the rack pinion 54, and this last, through its gearing with the rack, reciprocates it, together with the lifter plate and bobbins in a vertical plane a distance equivalent to the depth of the bobbin and thus allows the flyer to wind the slubbing over the full length of the bobbin.

13. Drawing Box Knocker-off Mechanism.

Figs. 245 and 246 show, in elevation, side and front views respectively of the essential features of this accessory mechanism as applied to the first drawing or weigh box. The letters in each diagram refer to like details. A portion of the front roller shaft is shown at X, one of the bottom rollers at Y and the draft wheel at Z. A worm A, is compounded with the front roller and its teeth intermesh with those of a worm wheel B, which is screwed fast to a shaft C, adjusted and supported obliquely to the roller shaft X. Near to the lower end of shaft C a worm D, is compounded which gears into and drives a stud wheel E, with which is compounded a stud pinion F. This last is the change wheel and its teeth intermesh with and drive, through a single intermediate stud wheel G, or a double stud wheel G and G^1, the knocker-off wheel H, which is the

last of this train. Compounded with the wheel H is a projecting stud I, designed to act with sufficient pressure, at each revolution, to removethe starting handle J, from its temporary adjusted position and through it,

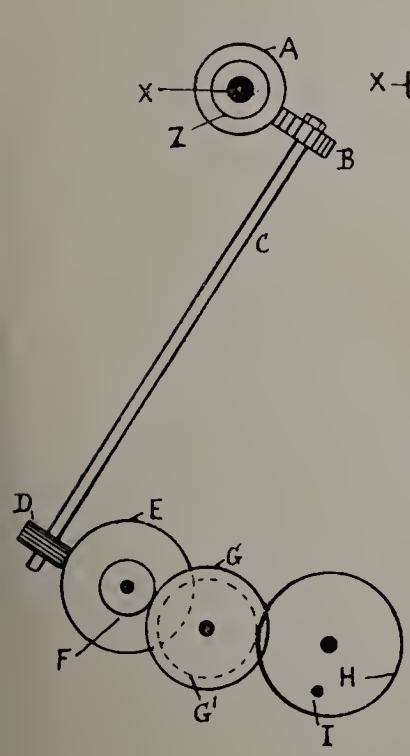

Fig. 245.

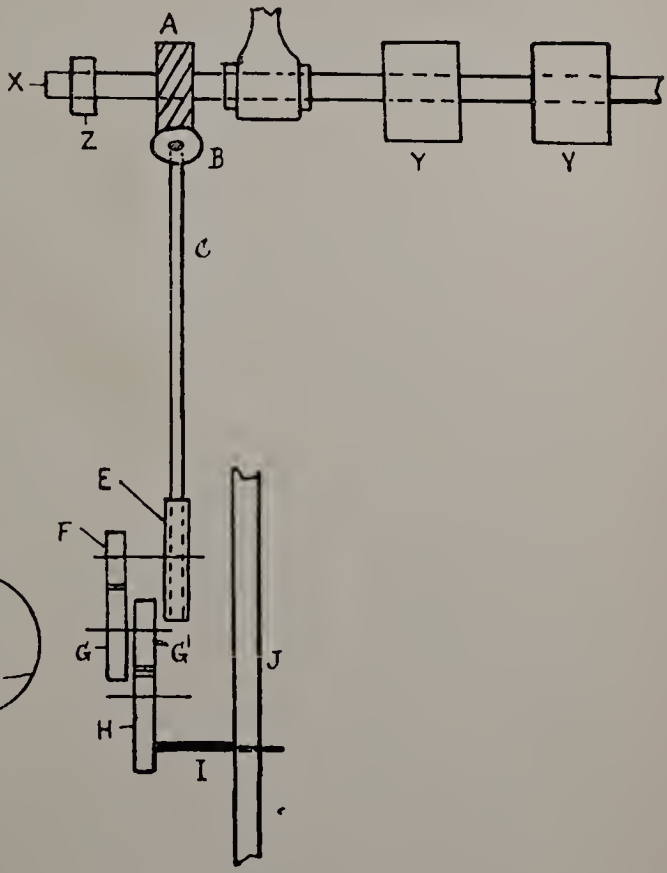

Fig. 246.

remove the belt fork with the driving belt from over the fast to the loose pulley. The total length of slubbing delivered by the front roller and wound by the spindle and flyer for each revolution of the knocker-off wheel H, is represented by the value of the

foregoing train of wheels multiplied by the circumference of the front roller in yards.

The following are the particulars of the factors which regulate the length turned off for each revolution of the knocker-off wheel H, with G as a single intermediate.

Worm wheel A, 1 tooth (single).
,, B, 17 teeth
,, D, 1 tooth
Stud wheel E, 60 teeth
Change wheel F, 20 teeth
Knocker-off wheel H, 60 teeth
Diameter of front roller Y, 5 inches.

For the solution of problems of this kind, it is best always to arrange the fractional equation so that the numerator shall contain all those factors which, if increased would produce a greater length and the denominator all those factors which if increased would produce less length thus :—

Total length in yards=

$$\begin{matrix}\text{More} \\ \text{Less}\end{matrix} \frac{\begin{matrix}\text{B} & \text{E} & \text{H}\\ 17 & 60 & 60\end{matrix}}{\begin{matrix}\text{A} & \text{D} & \text{F}\\ 1 & 1 & 20\end{matrix}} \times \frac{\begin{matrix}\text{Circumference}\\ \text{of Y.}\end{matrix}}{\begin{matrix}5 \times 22\\ 36 \times 7\end{matrix}} = 1335\tfrac{5}{7} \text{ yds.}$$

In the foregoing example all the factors are constant except the change wheel F. If this wheel be eliminated from the above solution, then the following constant number or gauge point will be obtained thus :—

$$\text{Gauge point} = \frac{17 \times 60 \times 60}{1 \times 1} \times \frac{5 \times 22}{36 \times 7} = 26714$$

This constant number or G. P. is useful in all future calculations, as, when this is known, it is only necessary to divide the G. P. by the proposed change wheel to obtain the length wound on to each bobbin for one revolution of the knocker-off wheel, and conversely, to divide the G. P. by any predetermined length of slubbing to find the required number of teeth in the change wheel.

EXAMPLE 2. In the illustrations, Figs. 245 and 246, the wheels G and G^1 act as a second double stud wheel. (These may be substituted by a single intermediate as worked in Example 1). The details of all the wheels shown in the illustrations are as follows :—

Dia. of front roller Y=4 inches ; a single worm wheel B 17 teeth ; D a single worm ; stud wheel E 60 teeth ; stud pinion F 30 teeth ; stud wheel G 50 teeth ; stud pinion G^1 40 teeth, and knocker off wheel 60 teeth. Calculate the number of yards delivered for each revolution of the knocker off wheel H.

SOLUTION :—

Length of slubbing in yards=

$$\frac{\text{More}}{\text{Less}} = \frac{\text{Circe. Y}}{36\times7} = \frac{4\times22}{} \times \frac{\text{B E G H}}{\text{F } G^1} = \frac{17\times60\times50\times60}{30\times40} = 888 \text{ yds.}$$

N.B.—The wheels E, F and G are all change wheels designedly arranged to facilitate the making of very small changes in length of production for each " knocker-off."

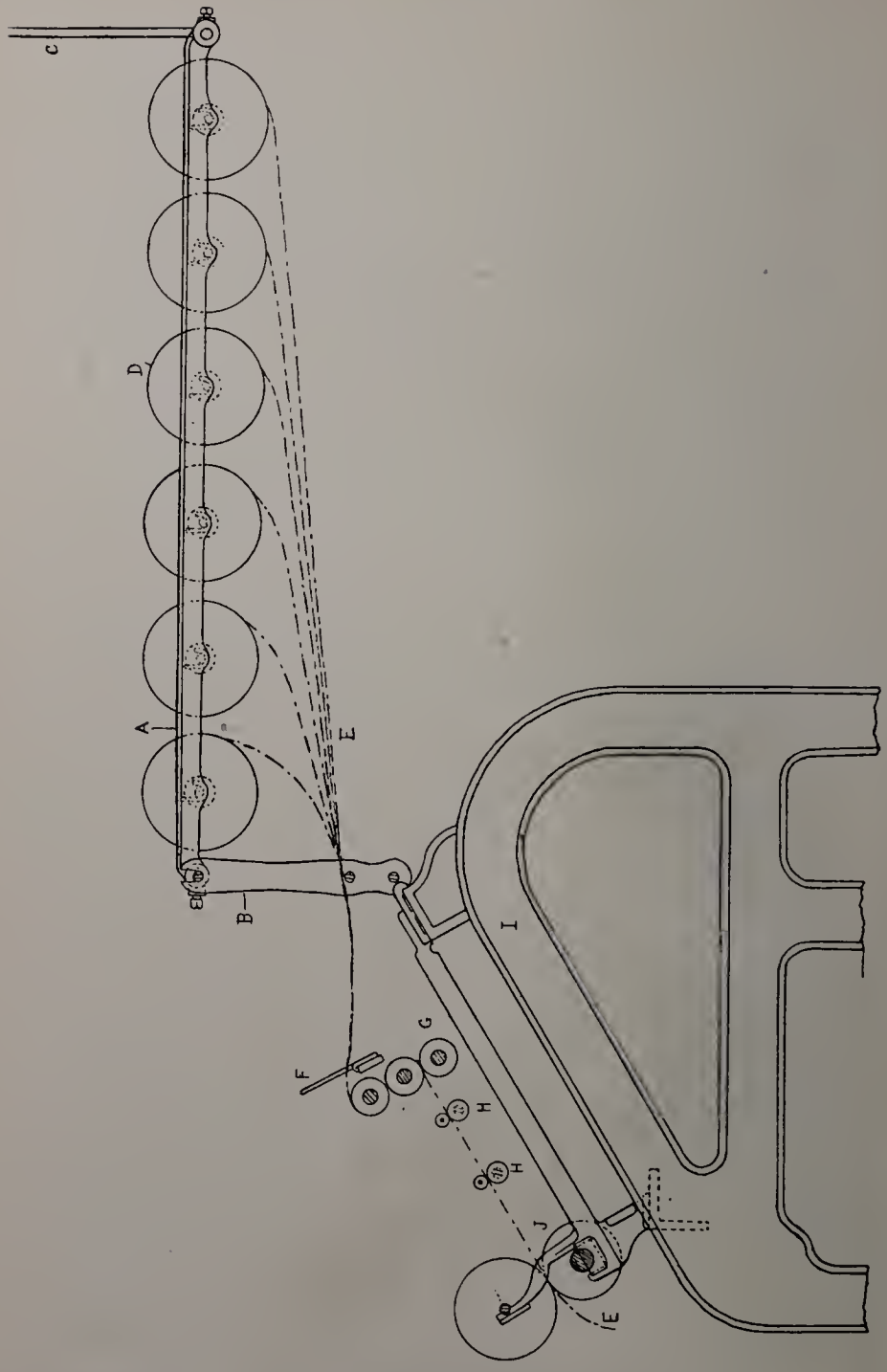

Fig. 247.

14. Swing Creel Feed. The illustration, Fig. 247, shows the common overhead arrangement of feeding from the bobbins to the drawing boxes in which the bobbins are placed in a horizontal

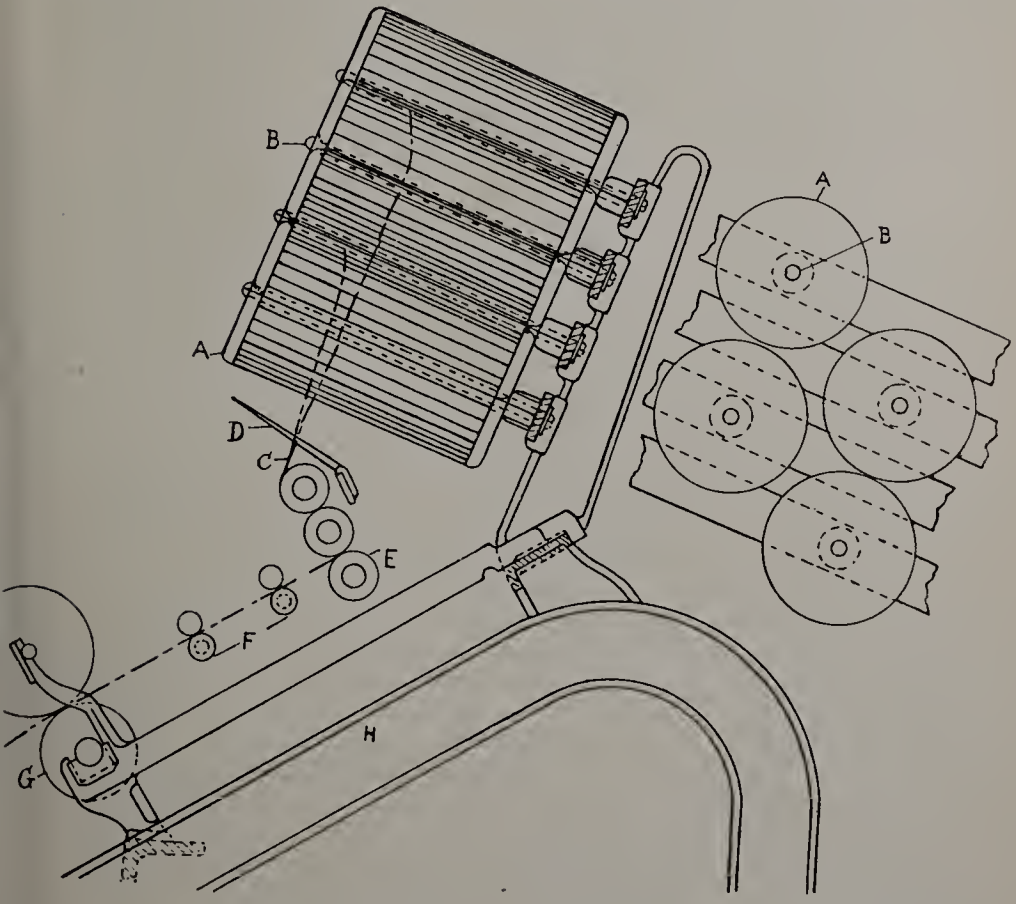

Fig. 248.

Fig. 249.

position and feed from the underside as shown. The illustration is for a 12″×6″ bobbin but the principle is common for all the larger sized bobbins used in worsted drawing.

The details of the mechanism are simple and may be enumerated as follows:—A, shows one of the horizontal rails supported at one end by the bracket B and the rear part of the frame I. The other end is supported from the ceiling of the room by the suspension rod C. The bobbins are shown at D and the slubbings at E. These pass through the guide F to the feed rollers G, the back carriers H and drawing rollers J.

15. Arrangement of Feed for Reducers and Dandy Rovers.

Fig. 248 shows an elevation and Fig. 249 a part plan of an improved design, by Prince Smith & Son, for feeding the reducers and roving boxes. The bobbins, A, are arranged for two ends per spindle. The spindles supporting the bobbins, the slubbing, slubbing guide, feed rollers, carriers and drawing rollers are shown at B, C, D, E, F and G respectively. A portion of the machine gable is shown at H.

CHAPTER XXXVII.

FUNDAMENTAL PRINCIPLES OF DRAWING AND SPINNING.

16. *Drafting.* 17. *Spindle draft.* 18. *Spindle and Distaff-draft.* 19. *The one-thread wheel-draft.* 20. *Hargreaves' Spinning Jenny-draft.* 21. *The Crompton Mule—draft.* 22. *Continuous roller drafting—Arkwright.* 23. *Characteristics of Spindle and roller drafted spun yarns.* 24. *Amount of draft.* 25. *Back and Front Rollers, Nips and Spindles.* 26. *Defective Drafting.* 27. *Drafting—alternately in opposite directions.* 28. *The Ratch and its functions.* 29. *The Object and Function of Carriers.* 30. *Preparing and Drawing Drafts compared.* 31. *Origin and Function of the Flyer.* 32. *Twist in Worsted Drawing.* 33. *Varieties of twist in Slubbing and Roving.* 34. *Winding and Drag.*

16. Drafting. As already explained, drafting is the term used to designate the relation of the final length of product delivered by any machine to the original length fed into that machine.

In Drawing and Spinning there are two fundamental but diverse principles of producing draft, (1) spindle drafting and (2) roller drafting.

17. Spindle draft. Spindle drafting is manipulated by increasing the distance apart of the spindle and the stock of textile fibres required to be drawn and spun. This fundamental principle is embodied in (a) The spindle and distaff; (b) The one-thread spinning wheel; (c) Hargreaves' Spinning Jenny, and (d) Crompton's mule in which the principle is still retained irrespective of all modern developments of the mule.

18. Spindle and Distaff—draft. In the original hand spinning by the spindle and distaff, the latter, which retained the wool or other textile material, was placed under the left arm or fixed in the waist belt of the operator and the prepared end of the wool was fastened to a loaded spindle; the fibres were then delicately drawn between the index finger and thumb of the left hand away from the stock in the distaff. Meanwhile the spindle, in suspension, was constantly rotated and gradually increased in distance from the fixed distaff until it almost reached the ground. Then the drawn and twisted length of yarn was wound by hand on to the spindle and made fast in the notch at the top of the spindle. This operation was continually repeated and so the drafting, twisting and winding were intermittent and successive.

19. The One-thread wheel-draft. In the evolution from the spindle and distaff to the hand spinning wheel, the spindle was placed in a relatively *fixed* horizontal position but free to rotate on its axis, to impart the requisite amount of twist to the fibres in

course of preparation, and eventually wind the spun thread on to the bobbin. So that the prepared length of the the wool to be spun, being fastened to the spindle, was twisted and drawn to a convenient length or stretch *away* from the spindle and then wound on to it.

20. Hargreaves' Spinning Jenny-draft. In the hand spinning Jenny or multiple spinning wheel, invented in 1764 by James Hargreaves, a Blackburn weaver, the spindles were arranged vertically, contiguous and free to revolve in a fixed frame.

The prepared slubbings or rovings were placed in a creel or bank which was adjustably fixed in an oblique position, between the gables of the machine so as to facilitate the free delivery of the slubbing to a series of wooden clasps and through which they were conveyed to the spindles. These wooden clasps formed part of a movable carriage which was free to travel in a horizontal direction to or from the spindles.

The prepared ends of the slubbings were made fast to the spindles and each respective slubbing was securely fixed in its clasp. The carriage was adjusted a distance from the spindle equal to one draw. Then the spindles were set in rotary motion and the carriage simultaneously commenced and continued to travel further from the fixed position of the spindles, until the required amount of *draft* had been attained when the carriage stopped, but the spindles continued to rotate until the full amount of twist had been put into the yarn.

It will be observed that this *principle* of drafting is identical with that of the one-thread spinning wheel.

21. The Crompton Mule draft. In the mule designed (1780) by Samuel Crompton, a Bolton weaver, the carded sliver received two distinct drawings, first, a drawing between different pairs of rollers as embodied in Arkwright's water frame and second, a draft between the spindles and retaining rollers which occupied the position of the clasps, as embodied in Hargreaves' Spinning Jenny. It should however be noted that in Hargreaves' machine, the carriage and clasps, in which the slubbing was securely gripped, traversed from the spindles to produce the draft, whereas in Crompton's mule, the spindle travelled away from the nip of the front rollers in which the slubbing was retained.

This principle of intermittent roller and spindle drafting, twisting and winding is still maintained in all modern mule spinning.

22. Continuous roller drafting —Arkwright. In roller drafting the whole process of attenuation is continuous and complete between the nip of the feed and delivery rollers, and further the operations of twisting and winding are simultaneously and continuously accomplished. The discovery and invention of roller drafting is shrouded somewhat in mystery but the most reliable records point to John Wyatt, of Lichfield (1738) and Lewis Paul as the pioneers, to Thomas Highs, of Leigh (1767) for many improvements and to Richard Arkwright of Preston (1769) for successfully developing and applying roller drafting in his spinning invention, originally turned by a horse, but subsequently water-driven and denominated the "Water twist frame." This machine was constructed with *four pairs* of rollers, revolving at

different speeds and designed to draw out the material into a finer thread than previously, before finally and simultaneously twisting it with the spindles and winding it by means of the flyers on to the bobbin. Arkwright originally constructed his machine to reduce roving into yarn, but later he produced rovings by the same principle and process and eventually evolved the present method of drawing, roving and throstle spinning still pre-eminently practised in worsted and flax spinning and other yarns and their preparation or the preliminary processes connected therewith.

23. Characteristics of Spindle and roller drafted spun yarns.

In the days immediately following the introduction of the Crompton Mule the spun yarns were better both in evenness and fineness than were those produced either on Arkwright's roller drawing machine or the Jenny alone. The mule, because of its suitability for spinning fine yarns was adopted in the worsted trade but ultimately, the throstle frame was brought so near perfection, that it supplanted the mule in the English worsted trade. The characteristic features, of worsted yarns, prepared and spun on the modern throstle fly frame which combines continuous roller draft and simultaneous twist, is clearness of definition, evenness, parallelism of fibres and relative uniformity of strength of yarn, as compared with the contemporary mule or spindle drawn threads, which are loftier and fuller in appearance and softer in handle and best suited to those woven fabrics where definition of design is not a prime characteristic.

24. Amount of draft.

There are many ideas held as regards the amount of draft which should be given to wool during its passage through the various operations of drawing. It is seldom that two persons of varied and practical experience agree on the same amount of draft even for similar kinds and weights of material. Nevertheless it is highly important that the draft should, as far as ever possible, be suited to the kind and quality of wool in course of preparation, e.g. short and fine Botany wools should only be given a small amount of draft at each operation which involves a relatively larger number of drawing operations than for cross-breds, medium and long wools which receive a large draft and fewer operations to produce the final rove. Other factors being equal, those wools in which the fibres are characterised by roughness of surface and many serratures generally admit of longer drafts because their natural tendency is to resist the drawing process. Much controversy has frequently arisen in respect to the adoption of uniform drafts for each successive drawing operation as compared with the general practice of making a slight difference in the draft at each operation. Incidentally, these various opinions and slight differences in practice of drafting are characteristic of the inherent possibilities which this branch, as most others in the textile industry, offers for the exercise of the personal element, inclination and initiative.

It is however always advisable to provide as many drawing operations and doublings as possible so as to produce a regular and even rove and yarn, and also to

simultaneously give the minimum amount of draft compatible with economy, turn-off, feed and delivery of the drawing frames in the sequence of operations, the required weight of roving and fineness of yarn count.

It is always better to produce a roving which is relatively light rather than heavy in weight, since it often occurs that irregular and twitty yarn is produced by having to spin from a rove which is too heavy and involving an excessive amount of draft.

The production of a good and sound yarn is therefore fundamentally dependent on the suitability and correctness of the draft.

Generally speaking the draft for fine Botany wools commences with about 3 at the first can gill box and terminates with 5 to $5\frac{1}{2}$ at the dandy roving box. For medium and crossbred wools the variation may be from 6 to 8 and for long English wools the drafts may range from 7 to 12. See Tables I, II and III.

25. Back and Front Rollers, Nips and Spindles. In the first drawing box fed with twisted slubbing there are four back or retaining rollers. These are all prepared with smooth surfaces and arranged in rotary contact with each other so that the slubbing is gripped between *three* separate nips and thus held rigidly. See Fig. 239.

The drawing or bottom rollers are finely or " scratch " fluted at varying distances apart so as to obviate the possibility of the " flutes " meeting too frequently in the same place of the upper roller. The bosses of the upper or pressing rollers are of wood or iron and covered

with hard or soft leather. Hard leather can be glued, single or double, on to either wood or iron and used for the Merino and good crossbred wools. Soft leather is usually nailed tightly on to the wood, but stretched and stitched on the iron rollers between which and the leather a piece of thick felt or another soft leather is inserted.

Soft leathers are used for long wools, mohair and the lower crossbreds.

26. Defective Drafting. Defective drafting occurs whenever a sufficient and uniform pressure is not applied to all the fibres during the operation of drawing in any of the boxes in the system, e.g. If the pressure of the feed rollers is not uniformly correct and even, so that they grip the slubbing at all points alike, then some of the fibres will be rapidly drawn by the front rollers, from the feed until the front rollers either become choked or grooved as a consequence ; and further, if the delivery rollers are not sufficiently weighted, they not only fail to uniformly draft the fibres but they also become so damaged as to impair their further usefulness.

Irregular and imperfect drafting frequently result when the spur teeth of the draft train of wheels do not correctly intermesh and also when any of the teeth are broken in which case the front or drawing rollers will be intermittingly and temporarily retarded. In this case there will be thick and thin places in the slubbing or rove and subsequently in the final spun thread. Such a yarn would be commonly denominated twitty and in all such, the twist is much increased in the finer parts.

27. Drafting alternately in opposite directions. Experience has demonstrated that no matter however effectively the wool combing operation may have been performed, the finished top will still be composed of fibres differing somewhat in length. Further, in the process of drawing the longest fibres are immediately seized by the front rollers and they abnormally draw forward in sympathy with them, the shorter and shortest fibres and so tend to produce an eneven thread which eventually manifests itself characteristically as twitty yarn. The most effective practical remedy known for this natural but injurious tendency is to draft the wool fibres alternately, first in one direction and then in the other, throughout the whole sequence of the drawing operations. For obvious reasons, the back and front rollers including any intermediate rollers or carriers should all be set perfectly parallel to each other.

28. The Ratch and its functions. Inseparably linked with drafting is the distance apart which the back and front rollers must be set and adjusted. In worsted spinning this distance is technically denominated the "Ratch."

Theoretically, the ratch should always be adjusted to a distance, which is at least equivalent to the length of the longest fibres. The point is controversial since some practical men prefer to work with a relatively shorter ratch, but this method involves the reduction in length by the breakage of these fibres. The defect of this plan is that it also reduces the spinning properties

and involves the introduction of a relative higher twist and a corresponding reduction in production, also a weaker and less regular yarn and a greater strain upon the rollers and leathers.

Further, it will be obvious that the fibres of long staple wools will be wrapped around each other a greater number of times in their length than fibres from short

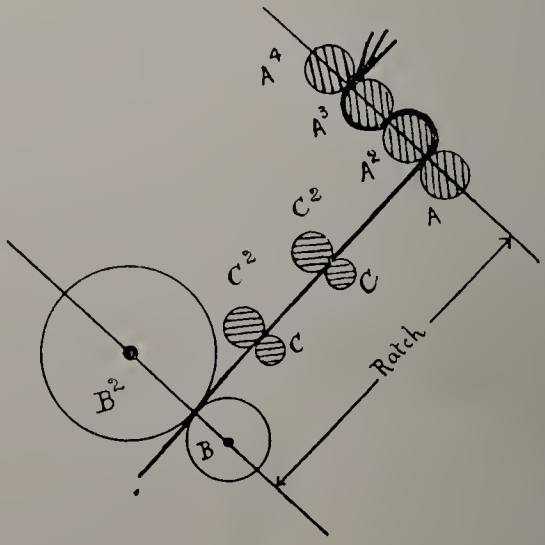

Fig. 250.

staple wools and consequently more force is required to draw them forward, for which reason it is advisable to set the ratch a distance slightly greater than the longest fibres of the staple—and incidently, for the same reason, longer drafts and fewer operations are necessary and given.

Fig. 250 is a diagram of the mechanical factors involved in the construction, adjustment and function of the

ratch. A is the bottom feed or back roller; A^2, A^3, A^4 are pressing rollers whose function it is to grip and retain the slubbing as it is fed into the machine. C and C^2 are the front and back carriers respectively. B is the bottom drawing or front roller positively driven as will be understood. B^2 is the top or pressing roller for same and its surface is usually covered with one or two layers of leather so as to more effectively grip the fibres and draw them forward.

The position of the front rollers is fixed but those of the back rollers and carriers are adjustable and are altered to suit the different kinds of wool and length of staple.

29. The Object and Function of Carriers. In worsted drawing and spinning one, two or three pairs of carrier or auxiliary rollers are introduced and used in parallel lines between the retaining and drawing rollers.

The bottom roller of each pair is made of steel and is positively driven, while each top roller is made of hard wood and is driven by frictional contact while resting on the slubbing or rove. Each pair of carrier rollers is capable of independent adjustment so as to be able to serve as supplementary ratches between the back and front rollers, e.g. If the fibres in the slubbing, in process of drawing, vary from 3 to 7 inches in length and the main ratch is adjusted to about $7\frac{1}{8}$ inches apart and *without* carriers, then the shorter fibres, immediately they are received by the front rollers, will be rapidly drawn away in groups, instead of conforming to the

fundamental principle of drafting which is essentially a reduction in thickness of the slubbing and obtained by drawing the fibres over each other, and where one end of the fibre under the influence of the nip of the front rollers must be free to slide over its contemporaries. Intermediate carriers are therefore employed and twist put into the slubbing to preserve the *length* of the fibres upon which the strength of the yarn and the spinning capacity of the wool chiefly depend.

The function of the carriers is therefore to act with a restraining influence upon the twist in the slubbing lying between the back and front rollers, and simultaneously upon the short fibres as they are passing between the grips of the carrier rollers and so retain them in their relative position in the slubbing or rove and thus prevent them from being pulled down too rapidly by the front rollers. The first row of carriers require to be set near enough to the front rollers so as to retain the twist in the slubbing, to approximately the length of the shortest fibres. Immediately this point is passed the slubbing gradually unrolls and the twist is set free.

30. Preparing and Drawing Drafts, compared.

Briefly summarising the object and functions of draft, ratch and carriers, it will readily be perceived that the drafting operation including the can and two spindle drawing boxes is all obtained between the back and front rollers of the respective machines as distinguished from gill preparing where there are at least *two* distinct draftings in each machine—*first*,

between the feed rollers and fallers and *second* between the fallers and drawing rollers.

In the Gill drawing box there is no draft between the feed rollers and fallers, only a slight lead is given to the fallers. The first faller which rises and penetrates the sliver coming from the feed roller, must rise a short distance from the back rollers according to the length of the wool fibre. The sliver should be sufficiently tight to lie flat and evenly in the pins without being unduly stretched.

31. Origin and Function of the Flyer.

The introduction of the flyer combined with the spindle served the double purpose of simultaneously twisting and winding the drawn thread on to the bobbin and as such its advent in 1520 was epochal as hitherto the work had been performed in two separate and intermittent operations. John Jurgen, a wood carver of Wuttenbuttel in Brunswick is credited as being the author of the invention.

Subsequently the same principle of mechanism though differing in detail was discovered among the sketches and inventions of Leonardo da Vinci, inventor, artist, architect and philosopher who died in 1519.

JURGEN provided a series of small hooks along the wings of the flyer, whose purpose it was to direct the drawn material on to the different parts of the bobbin at the will of the operator who successively changed the yarn from one hook to the other, for the full length of the bobbin.

LEONARDO'S plan was much better. He formed a small hook at the end of each wing of the flyer and through one of these, the material was guided to the bobbin.

The spindle blade he made longer by the length of the bobbin, the spindle and flyer he caused to be reciprocated in a vertical plane the full length of the bobbin which remained fixed on a stationary plate and by which means the drawn material was distributed over the whole length of the bobbin.

As primarily adopted by Arkwright and now universally practised, the plate, on which the bobbin rests, traverses the full vertical distance of the barrel of the bobbin, by which means it is evenly filled.

32. Twist in Worsted Drawing.

Twist is put into worsted slubbing for a two-fold purpose, *first*, because its influence tends to impart a better holding of the wool fibres upon each other, to exercise a controlling resistance to the pull of the drawing rollers and also to maintain and encourage the most perfect and even distribution of the different lengths of fibre in the slubbing or rove of the subsequent drawing operation and *second*, the twisted slubbing can be the better wound, by means of the revolving flyer, on to a bobbin in which form it is most convenient for storage, transit or further treatment.

The amount of twist imparted to the slubbing and rove must be such that it will be strong enough to drag the bobbin round, during the filling or unwinding process, irrespective of the twist necessary to produce the best

drawing results. If the twist is too hard the longer fibres are liable to be broken during drafting and if the amount of twist is too small the individual fibres have not sufficient hold upon each other to resist the pull of the drawing rollers with the consequent result of uneven slubbing or rove. The actual amount of twist to be given varies considerably and must therefore be determined and judged according to the class of wool, length and fineness of fibre, whether severely washed and dried, the kind of combing it has received and the length of time the tops have been in stock.

The examples from practice on page 600, of the varieties of twist put into slubbings and rovings are tabulated for instruction, study, reference and comparison.

34. Winding and Drag. In open drawing and throstle spinning the function of the flyer is not only to impart the required amount of twist to the slubbing or yarn but also to wind the material on to the bobbin as uniformly as possible. This simple operation can only be performed when either the flyer or the bobbin travels faster than the other—technically denominated "flyer-lead" or "bobbin-lead."

In "open" drawing the flyer leads and the slubbing or rove through its attachment to the bobbin drags or pulls the bobbin after it at such a rate, that, practically, the bobbin just receives the quantity of slubbing delivered by the front rollers during each revolution of the flyer, irrespective of the increasing number of layers of slubbing and the diameter of the bobbin.

Kind of Wool.	Yorks.& Lincoln Hogs & Wether.	Crossbred Prepared		Crossbred Carded.		Botany.		
Length of Wool ...	15″	13″	11″	10″	9″			
Spinning Capacity ...		44s	48/50	46	50	56	64	70
Counts of Spun Yarn	28s	32	40	28	40	44	56	60
	No. of	turns p	er yard	at each	operati	on		
2 Spindle Gill Box ...	4·6	5·3	5·5	6·0	5·6	5·3	4·5	5·0
Drawing Box	5·6	6·1	6·25	7·4	9·9	8·3	8·2	9·0
Weigh Box	9·7	10·5	10·0	11·0	13·4	9·9	10·6	11·5
First Finisher ...	16·0	17·2	16·0	19·0	31·2	12·7	11·5	13·5
Second Finisher ...						22·6	26·0	29·0
Reducer ...						59·0	68·3	74·0
Roving ...	55·5	59·8	60·0	65·6	70·8			
	Weight	in dra	ms per	40 yar	ds.			
	$7\frac{1}{2}$	6	$5\frac{1}{2}$	$6\frac{1}{2}$	5			
						56s	64s	70s
Dandy Roving ...						Turns p	er yard	
	Weight per 40 yds.=				4 drs.	76	82	82
					$3\frac{1}{2}$,,	84	90	90
					3 ,,	98	102	102
					$2\frac{1}{2}$,,	109	113	113
					2 ,,	113	123	123
					$1\frac{3}{8}$,,		155	155

It is therefore essential to control the speed of the bobbin, so that it neither rotates as fast as the flyer nor intermittingly overruns it and also that the strain upon the twisted slubbing shall be as uniform as possible.

Fig. 251 shews an elevation of a flyer, bobbin and spindle.

Fig. 252 is a plan of an empty bobbin and Fig. 253 of a full bobbin. The bobbin is "bushed" at both ends so as to reduce to a minimum the frictional contact between the spindle and the bobbin.

The same letters in each diagram refer to corresponding details. A indicates the perforations in the head of the flyer B. C shows the bushes inside the barrel of the bobbin D of which E is the flange or rim. F shows the horizontal arm of the flyer and G a ring in same for directing the slubbing H to the vertical arm of the flyer and bobbin D. The spindle is indicated at I, the drag washers at J, the builder plate at K, the spindle pulley at L, belt at M, and driving pulley at N on the pulley shaft O.

In practice the control of the rotary motion of the bobbin is frictional and negative. The retardation or drag on the bobbin is accomplished and modified by one or other of the following methods.

Cloth, leather or other washers of different diameters are usually placed so as to circumscribe the spindle and lie evenly on the lifter plate and in frictional contact with the base of the rotating bobbin.

The larger the diameter of the washers the greater the drag.

Cloth washers are generally used for fine and medium wools, leather for crossbred and long wools.

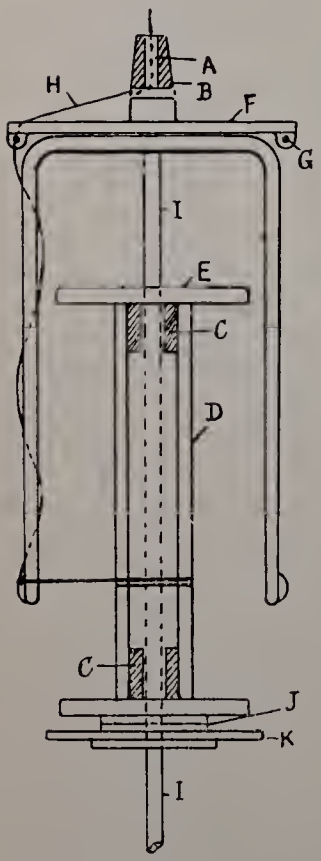

Fig. 251.

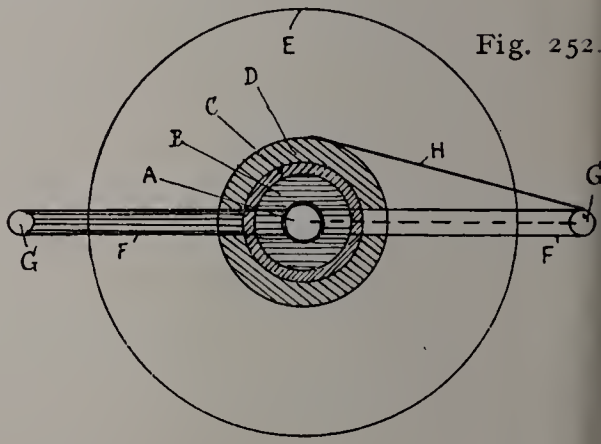

Fig. 252.

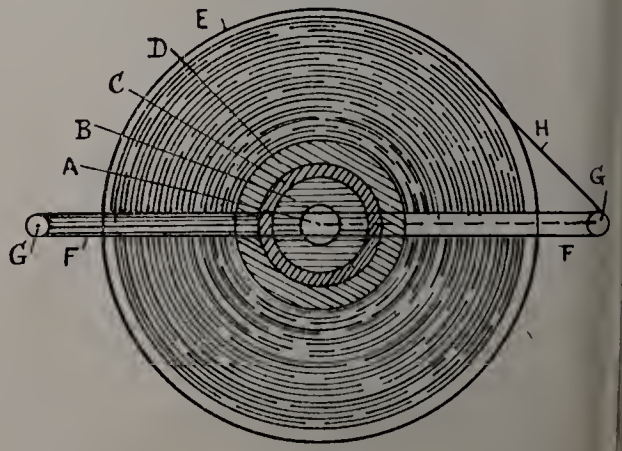

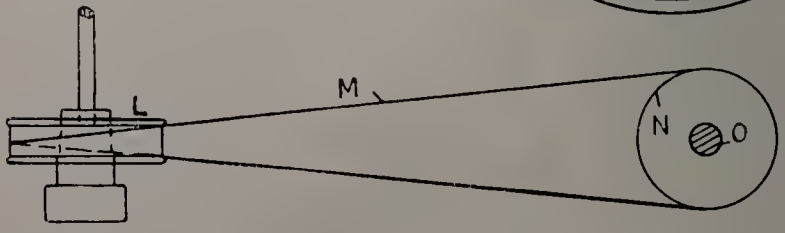

Fig. 253.

Rubber washers are sometimes used for the coarsest, strongest and longest wools.

Bare contact of the bobbin with the builder plate combined with a weighted cord operating in close and circumferential contact with a groove, formed in the bottom flange of the bobbin, is common and effective practice in throstle spinning, for flax and other strong textile fibres.

Generally speaking the greater the drag on the bobbin, the smarter and stronger is the resultant product, but if the drag is excessive, then a slight draft is produced between the front rollers and the spindle, more breakages occur during the process and the slubbing or rove is less regular.

Theoretically, the *relative* strain on the drawn and twisted material is equivalent to the product of the weight and speed of the bobbin divided by its diameter.

A series of experiments demonstrated that the strength of a spun yard increased from 4 to 6 per cent. between the maximum and minimum drag load possible and compatible with a satisfactory spin. The determination of the correct amount of drag for the different textile materials is so complicated a problem that it is seldom, if ever, attempted in practice.

The tension applied is usually determined by observation, feel and judgment based on experience.

CHAPTER XXXVIII.

DRAWING OPERATIONS AND REDUCTION CALCULATIONS.

35. *Number of Operations.* 36. *Varieties of treatment for Special lots : Table I, Long Wools ; Table II, Cross-breds ; Table III, Botany Wools ; Table IV, Cashmere Wool.* 37. *Plan of single set of Botany drawing.* 38. *Plan of Double set of Botany drawing : Tables V and VI. Specification details for Botany and Long Wool drawing boxes.* 39. *Problems on reduction from finished top to rove.* 40. *Weights of Roving for 70s Top.* 41. *Testing the weight of the roving.* 42. *Reduction Problems, Examples, Exercises.*

35. Number of Operations. THE exact number of operations, variety of treatment and diverse details of mechanism for each drawing process vary for each lot of wool.

Primarily the number of processes is governed by the quality, condition and weight of the given top and size of the required roving. The weight of roving is somewhat modified by the number of spinning spindles which must be kept constantly supplied with rove. Finally the details of draft, ratch, carriers, twist, drag, number and speed of spindles and other similar factors are modified according to the judgment of the manager or overlooker.

Briefly, for long wools, six or seven operations are usually sufficient; for crossbreds of about 50s quality, eight operations are necessary and for Botany wools, nine or ten operations are frequently given.

For mixtures and coloured tops, two or more additional operations are often given in order to produce as perfect a blending of the different coloured fibres as possible.

36. Varieties of treatment for special lots.

(a) Given a blend of tops composed of short and tender wool the fibres of which possess very little resisting or drawing power. This wool must be worked with very short drafts and ratches, the carrier rollers must be adjusted close to the front rollers and heavy or iron top carriers must be used so as to keep the twist in the slubbing as long a time as possible towards the nip of the front rollers. An increase to the normal amount of twist must be given both to the slubbing and rove in order to impart the necessary strength to the strands during the winding or unwinding of the bobbin.

(b) Given a good blend of tops, uniform in length, strong in fibre, soft in handle and possessing good resisting properties. Then, the best results will be obtained by working with a full draft, a free ratch, open carriers with light ones on the top, a medium twist and an easy drag.

(c) Given a 50s crossbred top, 8 inch staple, weighing 160 drams per 40 yards. Five operations are required and the weight of rove is required to be 20 drams per 40 yards.

The following are the approximate drafts and doublings given in practice. Other drafts and doublings might be satisfactorily given to meet such an abnormal case.

1.	Double Can gill box,	5·2	Draft,	8	doublings.
1.	Two spindle gill box,	6	,,	6	,,
1.	Four spindle drawing box,	6	,,	4	,,
1.	Eight spindle finisher,	7	,,	3	,,
2.	Sixteen spindle reducer,	7	,,	2	,,

In the first two operations of the above there has only been a *levelling-up* and *no reduction* has been made. This principle to a less extent is frequently adopted in practice, both in worsted and flax drawing but it does however appear to be more reasonable to let each drawing machine have a fair share of the reducing process instead of leaving the bulk of the work to the last few machines, especially the roving and spinning frames, though to a limited extent it might be advisable to arrange for relatively shorter drafts in the gill drawing boxes than in the slubbing and roving machines, because the slivers being in an untwisted state are less able to bear the strain than the slubbing or rove which has been reduced in thickness and the "ends" twisted.

The following examples selected from practice are typical of the approximate drafts and doublings which should be given for the four distinct classes of wool specified, viz:—Long Wools, Crossbreds, Botany and Cashmere wools, respectively tabulated in tables I, II, III, and IV.

Table 1.

LONG WOOLS.

Class of Wool.
Length of Wool.—Average 11″
Spinning Capacity=36s.
Weight of finished top drams 40 yds.
Weight of rove 4 ,, ,,
Counts of Yarn required Worsted.

	Operation.	Size of Bobbin.	Pitch of Spindles.	Doubling	Draft.
1.	Can Gill Box			6	7
2.	2 Spindle Gill Box	14×9	$12\frac{3}{8}$	6	7
3.	4 Spindle Gill Box	14×9	$12\frac{3}{8}$	5	7
4.	6 Spindle Gill Box	12×8	$11\frac{1}{4}$	4	8
5.	6 Spindle Finisher	11×6	$9\frac{1}{4}$	4	8
6.	Spindle Rover	$6\times3\frac{1}{2}$	$5\frac{1}{4}$	2	8·5

Table II.

CROSS BRED WOOLS.

Class of Wool.
Length of—Average 9″
Spinning Capacity. 50s
Weight of Finished Top. drams 40 yds.
Weight of rove 2·4 ,, ,,
Counts of Yarn required Worsted.

	Operation.	Size of Bobbin.	Pitch of Spindles.	Doublings.	Drafts	Diameter of Rollers.	
						Back.	Front.
						in.	in.
1.	Double Can Gill Box			8	6	3	2½
2.	2 Spindle Gill Box	14×9	12⅜″	6	6	3	2½
3.	4 Spindle Drawing Box	14×9	12⅜″	5	7	2½	4
4.	6 Spindle Drawing Box	14×8	11¼″	5	7	2½	4
5.	8 Spindle Drawing Box	14×7	10¼″	5	7·5	2½	4
6.	14 Spindle Finisher	12×6	9¼″	3	7·5	2½	4
7.	18 Spindle Finisher	9×4½	6¼″	3	8	2*	4*
8.	22 Spindle Reducer	8×4	6″	2	8	2*	4*
9.	30 Spindle Rover	6×3	5″	2	8	2	4

* Usually omitted.

Table III.

BOTANY WOOLS.

Class of Wool.
Length of Wool. —Average $5\frac{1}{2}''$.
Spinning Capacity—70s top.
Weight of finished top drams 40yds.
Weight of rove 1·75 ,, ,,
Counts of Yarn required Worsted.

	Operation.	Size of Bobbin.	Pitch of Spindles.	Doublings.	Drafts	Diameter of Rollers.	
						Back.	Front.
			in.			in.	in.
1.	Double Can Gill Box			5	3	3	2
2.	2 Spindle Gill Box	14×9	$12\frac{3}{8}$	4	3	3	2
3.	4 Spindle Drawing Box	14×9	$12\frac{3}{8}$	4	4	$2\frac{1}{2}$	4
4.	6 Spindle Weigh Box	14×8	$11\frac{1}{4}$	4	4	$2\frac{1}{2}$	4
5.	8 Spindle Drawing Box	14×7	$10\frac{1}{4}$	4	4	$2\frac{1}{2}$	4
6.	14 Spindle Finisher	12×6	$9\frac{1}{4}$	3	4·5	$2\frac{1}{2}$	4
7.	24 Spindle Finisher	$9\times4\frac{1}{2}$	$6\frac{1}{4}$	3	5	2	3
8.	30 Spindle Reducer	$6\times3\frac{1}{2}$	$5\frac{1}{4}$	3	5	2	3
9.	32 Spindle Rover	5×3	$4\frac{1}{4}$	2	5·5	2	$2\frac{1}{2}$

Table IV.

Set of drawing machines for fine cashmere wool—Length of staple 4 inches; Weight of top 386 drams, 40 yds; weight of roving 10 drams, 40 yds.; 9 operations

		Draft.	Doublings.
1.	Single head, can gill box	4	3
2.	Double ,, ,, boxes	4	3
2.	Two spindle gill boxes	4	3
1.	Four ,, drawing box	5	5
1.	Six ,, weigh box	5	4
2.	Eight ,, finisher boxes	5	3
2.	Sixteen ,, ,, ,,	5	3
2.	Twenty-four spindle reducer	5	2
8.	Thirty spindle rovers	5	2

37. Plan of single set of Botany drawing. Fig. 254 is a plan of the arrangement for a single set of Botany drawing by Messrs. Prince Smith & Sons, Keighley. The inside measurements of the drawing room are $42' \times 64'\ 6''$ and the positions of three lines of shafting are shown at A, B and C. The sequence of operations is indicated by the numerals in arithmetical order. The pitch and number of spindles for each operation are as follows:—

1st	Operation.	Double head can gill box	
2nd	,,	Two spindle gill box	
3rd	,,	Two spindle drawing box	$12\frac{3}{8}''$ pitch.
4th	,,	Four spindle drawing box	$10\frac{1}{4}''$,,
5th	,,	Six spindle drawing box	$9\frac{1}{4}''$,,
6th	,,	Ten spindle 1st Finisher	$9\frac{1}{4}''$,,
7th	,,	2×12 spindle 2nd ,,	$7\frac{1}{4}''$,,
8th	,,	3×24 spindle reducers	$6''$,,
9th	,,	6×36 spindle rovers	$5''$,,

38. Plan of Double set of Botany drawing.

Fig. 255 is a plan of the arrangement for two sets of Botany drawing designed to supply eight cap spinners of 200 spindles each and $3\frac{1}{2}''$ pitch and four cap twisters of 200 spindles each and $3\frac{1}{2}''$ pitch and also

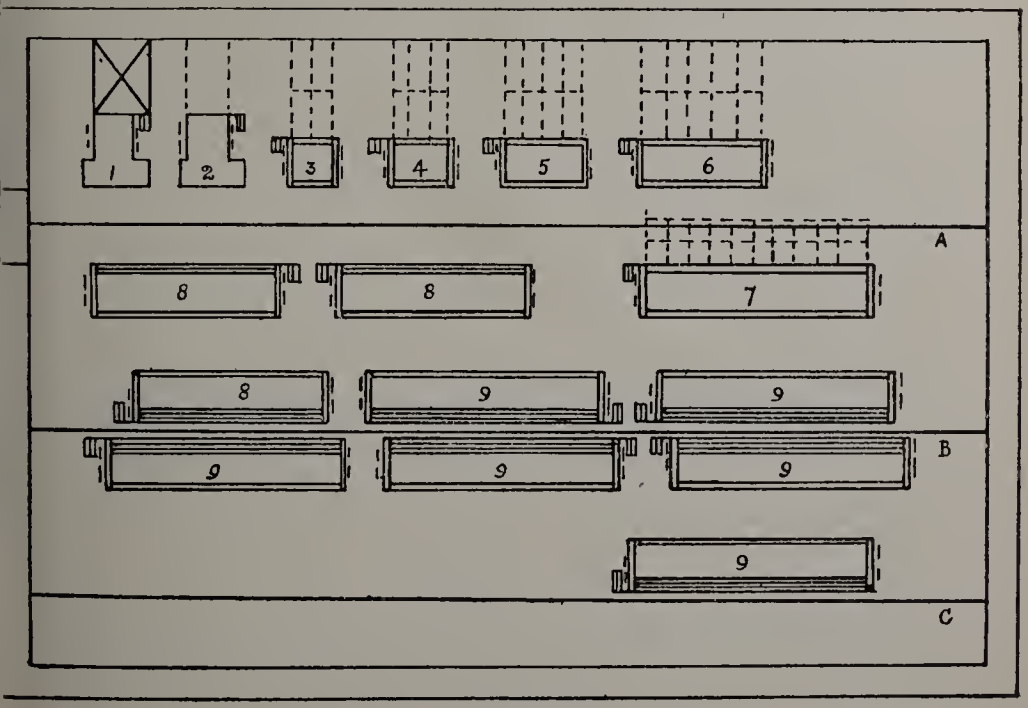

Fig. 254.

one 40 " drum " cheese winder. The inside dimensions of the drawing room are 92 ft. by 48 ft. The positions of three line shafts are shown at A, B and C.

The sequence of operations is indicated by the numerals in arithmetical order. The pitch and number of spindles for each process are as follows :—

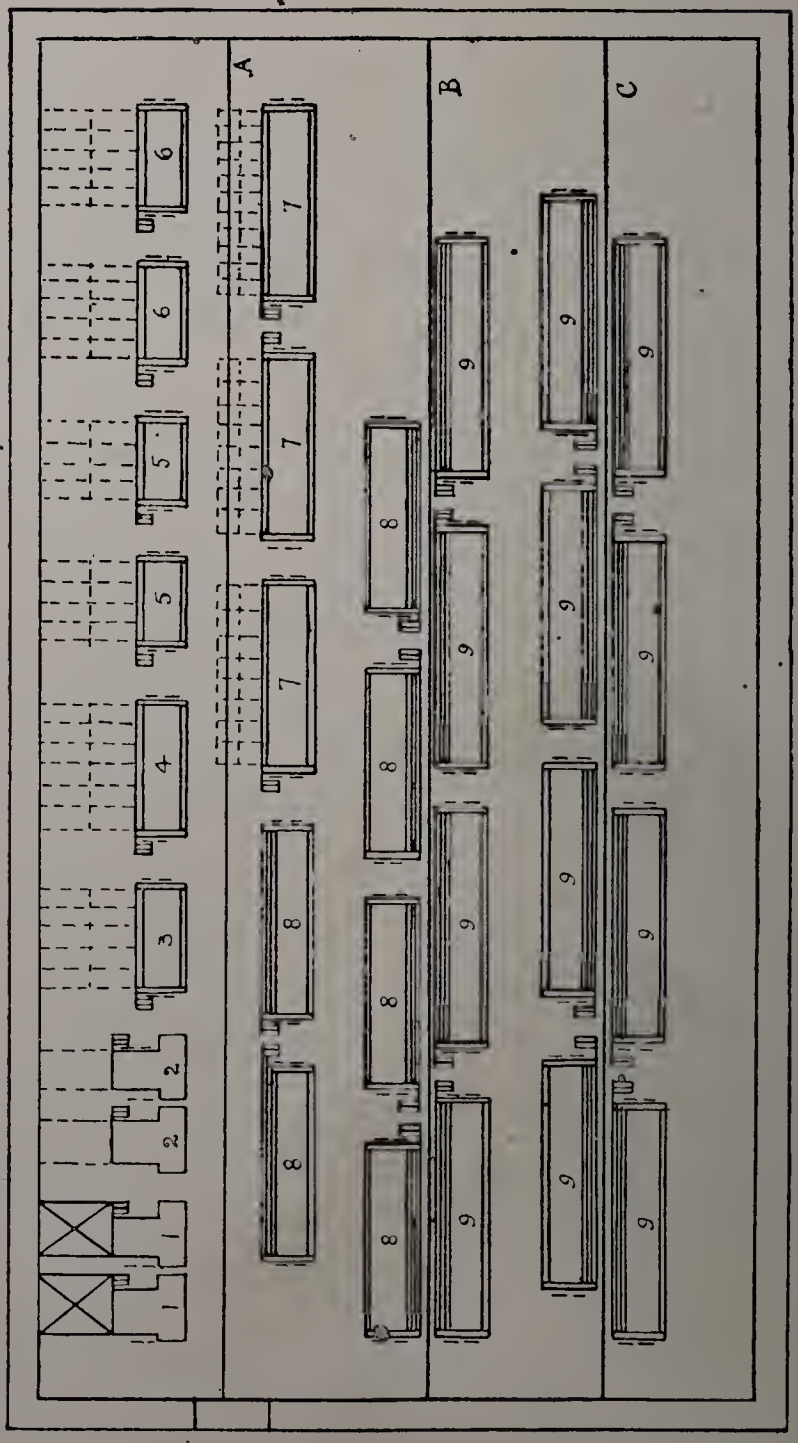

Fig. 255.

1.	Two, double head can gill boxes		
2.	Two—2 spindle can gill boxes		
3.	One—6 ,,	drawing box	$12\frac{3}{8}''$ pitch
4.	One—8 ,,	,, ,,	$12\frac{3}{8}''$,,
5.	Two—6 ,,	,, ,,	$10\frac{1}{4}''$,,
6.	Two—8 ,,	1st finishers	$9\frac{1}{4}''$,,
7.	Three—20 ,,	2nd ,,	$7\frac{1}{4}''$,,
8.	Six—24 ,,	Reducers	$6''$,,
9.	Twelve—36,,	Rovers	$5''$,,

TABLE V supplies a complete list of important particulars of machine details for an average set of Botany drawing by Prince Smith & Son, Ltd.

TABLE VI supplies a full list of essential particulars of machine details for an average set of Long Wool drawing boxes by Hall & Stells, Ltd.

39. Problems on reduction from finished top to rove.

In worsted spinning and weaving the different sizes or counts of yarn are represented by a *varying length* for a fixed weight of material, e.g. The counts of yarn equal the No. of hanks of 560 yds. each in 1 lb. weight.

In worsted drawing the different sizes of rove, slubbing or sliver are represented by a *varying weight* for a fixed length of material, e.g. The size of rove, etc., is denominated by its weight in drams for a 40 or 80 yards length. In the former instance, the finer the yarn the higher the count and in the latter case, the smaller the size of rove, the lesser the " count " (or weight in drams).

Table V.

		GILL BOXES.		
Operation	...	1.	2.	3.
Head or Spindles	...	Double	Double	2–2 Spindles
Low Front Roller — Diameter	...	2″	2″	2″
Low Front Roller — Breadth	...	12″	12″	$7\frac{7}{8}$″
Low Front Roller — Flutes	...	12	12	12
Top Front Roller — Diameter	...	$2\frac{1}{2}$″	$2\frac{1}{2}$″	$2\frac{1}{2}$″
Top Front Roller — Breadth	...	12″	12″	$5\frac{1}{2}$″
Top Front Roller — Flutes	...	15	15	15
Low Back Roller — Diameter	...	3″	3″	3″
Low Back Roller — Breadth	...	12″	12″	3″
Low Back Roller — Flutes	...	18	18	18
Top Back Roller — Diameter	...	3″	3″	$3\frac{1}{2}$″
Top Back Roller — Breadth	...	12″	12″	$3\frac{1}{2}$″
Top Back Roller — Flutes	...	21	21	21
Press Rollers	...	4″×8″	4″×8″	...
Pitch of Screw	...	$\frac{3}{8}$″ dble.	$\frac{3}{8}$″ dble.	$\frac{3}{8}$″ dble.
Fallers up	...	12	12	12
Rows of Pins	...	2	2	2
Set Over	...	11″	11″	$4\frac{1}{2}$″
No. of Pins per inch	...	14	14	16
Length of Pins	...	$1\frac{1}{4}$″ & $1\frac{3}{8}$″	$1\frac{1}{4}$″ & $1\frac{3}{8}$″	$1\frac{1}{4}$″ & $1\frac{3}{8}$″
Counts of Wire	...	16s	16s	20s
Dia. of driving pulley		10″	10″	10″
Mill Shaft	...	180 rev.	180 rev.	180 rev.
Double Stud wheel	...	...	...	70
Back roller wheel	...	...	...	70
Dimensions of can, etc.		36″×17″×11″	36″×17″×11″	14″×9″
Knocker-off	...	...	...	29×59
Back Shaft wheel	...	...	...	70
Front roller wheel	...	60	60	...

Table V.—*Continued.*

		Drawing.			Finishers.		3 Reducers.	5 Rovers.
Operation	...	4	5	6	7	8	9	10
Spindles	...	4	6	8	14	18	22	30
Low Front Roller — Diameter	...	4	4	4	4	3	3	$3\frac{1}{2}$
Low Front Roller — Breadth	...	5	5	$4\frac{1}{2}$	3	$2\frac{1}{2}$	2	$1\frac{1}{2}$
Top Front Roller — Diameter	...	$7\frac{3}{4}$	$7\frac{3}{4}$	$7\frac{3}{4}$	$7\frac{3}{4}$	$5\frac{1}{2}$	5	$4\frac{1}{2}$
Top Front Roller — Breadth	...	5	5	$4\frac{1}{2}$	3	$2\frac{1}{2}$	2	$1\frac{1}{2}$
Low Back Roller — Diameter	...	$2\frac{1}{2}$	$2\frac{1}{2}$	$2\frac{1}{2}$	$2\frac{1}{2}$	2	2	2
Low Back Roller — Breadth	...	6	6	6	$4\frac{5}{8}$	$2\frac{3}{4}$	2	2
Top Back Roller — Diameter	...	...	...	...	...	...	...	...
Top Back Roller — Breadth	...	6	6	6	$4\frac{5}{8}$	$2\frac{3}{4}$	2	2
Dia. of Driving pulley	...	10″	10″	10″	10″	12″	12″	12″
Mill Shaft	...	180	180	180	180	180	180	180
Back roller wheel	...	100	100	100	100	100	100	84
Front ,, ,,	...	60	155	155	155	155	180	125
Pitch of box	...	$12\frac{3}{8}$″	$12\frac{3}{8}$″	$10\frac{1}{4}$″	$9\frac{1}{4}$″	$7\frac{1}{4}$″	6″	$4\frac{1}{2}$″

Table V.—*Continued.*

	Drawing.			Finishers.		3 Reducers.	5 Rovers.
Dia. of Iron Carriers ...	1″	1″	1″	1″	1″	$\frac{7}{8}$″	$\frac{7}{8}$″
,, Wood ,, ...	1″&1$\frac{1}{8}$″	1″&1$\frac{1}{8}$″	1″&1$\frac{1}{8}$″	1″&1$\frac{1}{8}$″	1″&1$\frac{1}{8}$″	$\frac{3}{4}$″&$\frac{7}{8}$″	$\frac{3}{4}$″&$\frac{7}{8}$″
,, Spindle ...	$\frac{7}{8}$″	$\frac{7}{8}$″	$\frac{7}{8}$″	$\frac{3}{4}$″	$\frac{11}{16}$″	$\frac{5}{8}$″	$\frac{5}{8}$″
Size of Bobbin ...	14×9	14×8	14×7	12×6	9×5	7×4	5×3
Dia. of Whorl ...	6$\frac{1}{2}$″	6$\frac{1}{2}$″	6$\frac{1}{2}$″	4$\frac{1}{2}$″	3″	2″	2″
,, Pulley driving twist	9″	9″	9″	9″	10″	*	*
,, Twist pulley ...	9″	9″	9″	9″	10″	*	*
,, Spindle pulleys ...	5″	6$\frac{3}{4}$″	6$\frac{3}{4}$″	6$\frac{3}{4}$″	8″	8″	8″
Draft Stud Wheel ...	100	100	100&83	100	100	100&83	100&84
Mangle Shaft wheel ...	125	125	125	125	125	180	180
Main Shaft wheel ...	35 & 45	35 & 45	35 & 45	35 & 45	35 & 45		

* For operations 9 and 10.
Cylinder end wheel 60 teeth.
Single driving wheel 268″. Stud twist wheel 100″.

Table VI.—(*First part.*)—LONG WOOLS.

	Gill Boxes.	
Operation	1	2
Heads or spindles	1 Double Can	1 2 spindle
Front and Back Rollers. Low — Diameter	3″	3″
Front and Back Rollers. Low — Flutes	18	18
Front and Back Rollers. Top — Diameter	4	4
Front and Back Rollers. Top — Flutes	24	24
Press rollers	4″	4″
Pitch of screw	$\frac{5}{8}$″ Single	$\frac{5}{8}$″ Single
Fallers-up	14	14
No. of pins	9	10
*Wire gauge	14*	15*
Length of pins	$1\frac{7}{8}$″—$1\frac{3}{4}$″	$1\frac{7}{8}$″—$1\frac{3}{4}$″
Set over	$4\frac{1}{2}$″	$4\frac{1}{2}$″
Total length of fallers	$18\frac{1}{4}$″	$22\frac{3}{4}$″
Line shaft	180 revs.	180 revs.
Pulleys on M/c.	10″	10″
Screw bevels	12 & 18	12 & 18
Front roller wheel	70	70
Knocker-off wheels	29 & 39	29 & 39
Size of Can or bobbin	36×17×11	14×9

* See Chapter XXIX, Vol. II.

Second part continued on next page.

Table VI.—(*Second part.*)—LONG WOOLS.

	Drawing.		Finisher.	Reducer.	Roving.
Operation	3	4	5	6	7
No. of Spindles	4	6	8	16	4×20
Front Rollers Low. Diameter	5	5	5	5	5
Front Rollers Low. Breadth	5	4	3	...	...
Front Rollers Top Diameter	11	10½	10½	7	7
Front Rollers Top Breadth	5	4	3	...	...
Back roller diameter	2½	2½	2½	2	2
Iron carriers ,,	1¼	1¼	1¼	1	1
Wood ,, ,,	1¼—1½	1¼—1½	1¼—1½	1⅛	1⅛
Line shaft	180	revolu	tions p	er min	ute.
M/c. pulleys	10	10	10	12	12
Front roller wheel	155	155	155	155	155 teeth
Back roller	125	125	125	125	125 teeth
Draft double stud	125 & 100	125 & 100	125 & 100	125 & 100	125 & 100 teeth
Knocking-off	29 & 60	29 & 60	29 & 60	...	...
Pitch of spindles	12½″	10¼″	9¼″	6″	6″
Size of bobbin	14×9	14×9	11×6	8×4	6×3½
Dia. of spindle	⅞″	⅞″	¾″	...	...
Dia. of whorl	6½	6½	4½	...	...
Pulley driving spindle	6¾	7	8	8	8
,, ,, twist	9	9	9	35	35 teeth
Twist pulley	9	9	9	70	70 ,,

These two methods are therefore diametrically opposed in principle and are some evidence that the adoption of two such diverse systems for the same industry is accidental rather than intentional.

A better plan is adopted in the flax industry where the different sizes of the rove and drawings are represented by the length of rove or sliver in yards per ounce which is synonymous in principle with the numbering of the yarns, e.g. counts of linen yarns equal leas of 300 yds. each in the 1 lb. weight.

The drawing overlooker is usually given a certain class of tops of a definite weight and length which must be reduced to a given size of rove.

In many cases, especially when only a small variation exists in the usual run of qualities worked, it is customary to reduce the product of each drawing box to some definite standard weight and to reduce the Botany material at the second reducer to about 6 or 7 drams per 40 yds. so that it may be used for spinning medium or thick counts or further reduced without excessive drafting on the dandy roving frame for spinning fine counts.

40. Weights of Roving for 70s Top. Below are given suitable weights of roving per 40 yds. for various counts from an average 70s Botany top.

Counts	10	12	16	18	20	24	26	28	32	34
Wt. in drams per 40 yds.	9½	8	6	6	5	4	4	3	3¼	3
Yds. per oz.	67	80	106	106	128	160	160	213	197	213

Count	36	38	40	44	46	48	50	52	56	60	64
Wt. in drams per 40 yds.	3	2½	2½	2½	2¼	2¼	2	2	1¾	1½	1½
Yds. per oz.	213	256	256	256	284	284	320	320	366	427	427

41. Testing the weight of the roving.

It is of the utmost importance that the roving should be carefully weighed, at least twice each day to see that the weight is constant and to check the drawing. If any variation is found it must be remedied at once, otherwise the yarn will be irregular and the woven pieces correspondingly defective. It is not sufficient to simply test one roving ; at least four should be selected and each weighed separately to ascertain their individual variation. Afterwards the four may be measured and weighed together so as to get the average or it may be *directly* obtained by weighing a quarter of each original length.

N.B.—40 yards length of rove is a common standard but 80 yards give a better indication.

42. Reduction Problems.

Upon the receipt, in the drawing, of a new lot or blend of tops, which differ in quality from the usual or previous run, the overlooker, after determining the most suitable drafts and doublings, also finds it essential to ascertain by calculation the theoretical weights of the drawings at each process, for the usual standard lengths. These results should be tested at each operation by weighing 10, 20 or 40 yards of sliver or slubbing according to the thickness. The actual weights, when compared with the predetermined calculations will frequently be found to differ slightly and such difference should then be immediately rectified as far as possible.

In working out the weights for the different operations it is usual to begin with the weight of the "top" and proceed through all the operations to the rove.

Speaking generally the doublings increase the original weight of sliver, etc., and the numbers which represent the doublings are therefore used as multipliers; on the contrary, the draft attenuates and reduces the weight of the drawn product and therefore the numbers which represent the draft are used as divisors.

EXAMPLE 1.—Given a quantity of ordinary quality of Botany top weighing 256 drams for 40 yards, with doublings and drafts for ten operations as follows :—

Doublings	7	5	4	4	4	3	3	3	2	2
Draft	5	$5\frac{1}{2}$	$5\frac{1}{2}$	$5\frac{1}{2}$	$5\frac{1}{2}$	$5\frac{3}{4}$	$5\frac{3}{4}$	6	6	6

Calculate the weight of the drawings at each operation.

					Yards per oz.
Finished top.	Weight=		256 drs.		
		Doublings	7		2.5
1.	1st. can gill box	Draft	5)1,792		
		Weight	358	,,	1·8
		Doublings	5		
2.	2nd Can gill box	Draft	$5\frac{1}{2}$)1,790		
		Weight	325		2·
		Doublings	4		
3.	Two spindle gill box	Draft	$5\frac{1}{2}$)1,300		
		Weight	236	,,	2·7
4.	1st Drawing box	Doublings	4		
		Draft	944		

		Draft	$5\frac{1}{2})944$		
		Weight	171	drs.	3·8
5.	2nd Drawing box	Doublings	4		
		Draft	$5\frac{1}{2})684$		
		Weight	124	,,	5·2
6.	3rd Drawing box	Doublings	3		
		Draft	$5\frac{3}{4})372$		
		Weight	65	,,	9·8
7.	Finisher	Doublings	3		
		Draft	$5\frac{3}{4})195$		
		Weight	34	,,	19.
8.	1st Reducer	Doublings	3		
		Draft	6)102		
		Weight	17	,,	37·6
9.	2nd Reducer	Doublings	2		
		Draft	6)34	,,	
		Weight	5·6	,,	114
10.	Roving	Doublings	2		
		Draft	6)11·2		
		Weight	1·8	,,	355.

The foregoing is the solution of the problem worked out in full detail and shows the required calculated weight for each operation. The result may be obtained

by solving the problem as a fractional equation as follows :—

$$\frac{\text{Weight of top}}{1} \times \frac{\text{Product of doublings}}{\text{Products of draft}} = \text{Weight of rove}$$

Weight of Rove=

$$\frac{256}{1} \times \frac{7\times5\times4\times4\times4\times3\times3\times3\times2\times2}{5\times5\tfrac{1}{2}\times5\tfrac{1}{2}\times5\tfrac{1}{2}\times5\tfrac{1}{2}\times5\tfrac{3}{4}\times5\tfrac{3}{4}\times5\tfrac{3}{4}\times6\times6} = 1{\cdot}8 \text{ drs.}$$

or expressed in yards per oz.—

$$\frac{2{\cdot}5}{1} \times \frac{7\times5\times4\times4\times4\times3\times3\times3\times2\times2}{5\times5\tfrac{1}{2}\times5\tfrac{1}{2}\times5\tfrac{1}{2}\times5\tfrac{1}{2}\times5\tfrac{3}{4}\times5\tfrac{3}{4}\times5\tfrac{3}{4}\times6\times6} = 355$$

EXAMPLE 2.—Given long wool of 12″ staple ; finished top weighs 450 drams per 40 yds. Find the weight of the material delivered at each operation when the following doublings and drafts are given :—

Doublings	7	7	6	6	4	4	2
Drafts	8	8	8	9	10	10	10

1. $\frac{450}{1} \times \frac{7}{8} = 393{\cdot}8$ drams
2. $\frac{393{\cdot}8}{1} \times \frac{7}{8} = 344{\cdot}5$,,
3. $\frac{344{\cdot}5}{1} \times \frac{6}{8} = 258{\cdot}4$,,
4. $\frac{258{\cdot}4}{1} \times \frac{2}{3} = 172{\cdot}$,,
5. $\frac{172{\cdot}2}{1} \times \frac{4}{10} = 68{\cdot}9$,,
6. $\frac{68{\cdot}9}{1} \times \frac{4}{10} = 27{\cdot}6$,,
7. $\frac{27{\cdot}6}{1} \times \frac{2}{10} = 5{\cdot}5$,,

Where equal drafts are favoured, the method of solution may be shortened somewhat by the use of logarithms which may be found in any book of mathematical tables.

EXAMPLE 3.—Given a finished top weighing 256 drams per 40 yards, reduce the same to 8 dram roving and give nine operations with the following doublings :— 7, 5, 4, 4, 4, 3, 3, 3, 2. Find the uniform draft that will satisfy these conditions.

The method of procedure is as follows :—

(a) Divide the weight of the top by the required weight of roving and find the log. of this number and of each doubling number.

(b) Divide the sum of all the logs. thus obtained by the number of operations required. The anti-log. of this number is the uniform draft required, thus :—

drs.		drs.		
Log. of 256	÷	8	=	1·5051
		7	=	0·8451
		5	=	0·6990
		4	=	0·6021
		4	=	0·6021
		4	=	0·6021
		3	=	0·4771
		3	=	0·4771
		3	=	0·4771
		2	=	0·3010

9) 6·5878

Anti-log. of 0·7320=5·395, say 5·4 draft at 9 operations.

Otherwise expressed—

$$\text{Equal drafts} = \frac{256\times7\times5\times4\times4\times4\times3\times3\times3\times2}{8 \text{ dram roving}} = 5\cdot4^9$$

or Weight of roving=

$$\frac{256\times7\times5\times4\times4\times4\times3\times3\times3\times2}{5\cdot4^9} = 8 \text{ drs.}$$

EXAMPLE 4.—Find the weight of finished top put up behind the first can gill box, when the rove must weigh 2·2 drams per yard and the respective drafts and doublings are as follows :—

6.	6.	6.	6.	6.	6.	5.	5.	4.
2.	2.	3.	3.	4.	4.	4.	4.	4.

SOLUTION.—Since the doublings will increase and the drafts reduce the weight of the material the weight of top will equal :—

Wt. of rove

$$\frac{2\cdot2}{1} \times \frac{6\times6\times6\times6\times6\times6\times5\times5\times4}{2\times2\times3\times3\times4\times4\times4\times4\times4} = 278\tfrac{1}{2} \text{ drams.}$$

Work out the following exercises :—

EXERCISE 1.—Given wool 12 inches long, weight of top 700 drams for 40 yds., weight of roving required equals 6 drams, 40 yds., 7 operations. Supply the number of ends up and drafts at each box.

EXERCISE 2.—It is desired to find the weight of 40 yds. of sliver in the can after the 1st box when the weight of 40 yds. of roving is 5 drams and the number of ends are 2, 2, 2, 3, 3, 4, 4, 4, 4, 5, and the drafts for each box are 6, 5·5, 5, 5, 4·5, 4, 4, 4, 3, 3.

Ans., 115·5 drs.

EXERCISE 3.—A finished top for average spinning number of 42s worsted is composed of 1 part Southdown, 2 parts second quality Kent wethers, 2 parts Hogg and 6 parts first quality Kent wethers. Calculate the intermediate weights back to the top and forward to the rove when the operations are as follows :—

Box.	Doubling.	Draft.	Weight in drs. per 40 yds.
First can gill box ...	6	8·2	
Second ,, ,, ...	7	8·2	
Spindle ,, ...	7	8·4	
First drawing box ...	5	7·4	
Second ,, ,, ...	5	7·4	
Third ,, ,, ...	6	7·5	96
Finishing ,, ...	4	7·2	
Slubbing ...	2	7·	
Roving ...	2	8	

40 yds. at weigh box=96 drams.
40 yds roving=3·7 drams.

N.B.—As the average length of the above top is long and firm, the drafting at the beginning and end is heavy.

CHAPTER XXXIX.

CALCULATIONS ON THE PRODUCTION OF DRAFTS AND TWISTS.

Drafts in Gill, Drawing and Roving Boxes.

43. *Calculation of draft in Gill drawing.* 44. *Calculation of draft in drawing boxes.* 45. *Calculation of draft in Roving box.* 46. *Calculation of twist in Two-Spindle Gill box.* 47. *Calculations on Speed of spindles in Gill boxes.* 48. *Calculation of Twist in the Drawing Boxes.* 49. *Calculation of Speed of Spindles in Drawing Box.* 50. *Calculation of Twist in the Dandy Rover.* 51. *Calculation of Speed of Spindles in Roving box.*

It should be emphasised at this juncture that though the principle of drafting in the drawing boxes is the same as for the preparing, finishing and levelling gill boxes, the back rollers receive their rotary motion from the front rollers whereas in the gill boxes the reverse is the case. A reduction of the draft in the gill box involves a reduced surface speed and delivery of the front rollers, whereas any change of draft in the slubbing and drawing boxes, apart from any change in the twist does not affect the speed and length turned off by the front rollers. This arrangement of mechanism simplifies the necessary changes of twist, since the front and back rollers are

independently driven from the same upper back shaft. An increase or decrease of draft involves an increase or decrease of speed of the front rollers, hence an increase in the size of draft change wheel increases the speed of the front rollers and produces more draft.

In the drawing boxes the back rollers are driven from the same source as the spindles and can therefore be altered in direct speed ratio to the spindles without in any way interfering with the draft.

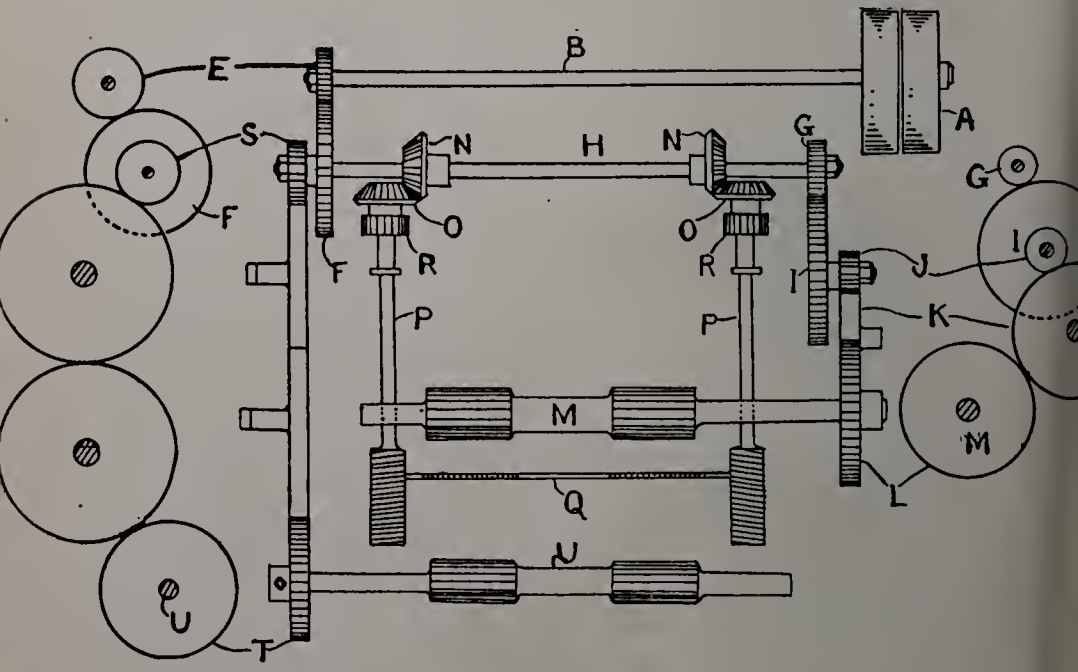

Fig. 256.

43. Calculation of draft in Gill drawing. Fig. 256 shows a plan view of a can gill box. The size of wheels, dimensions of roller and pitch of screws are given below for both single and double boxes.

A = 10″ dia. of pulleys on lower back shaft B.
E = 40 teeth of driving pinion on lower back shaft.
F = 70 teeth of driven spur wheel on upper back shaft H.

Back roller train.

G = 24/26 teeth of driving pinion to back roller train.
I = 70 teeth of driven stud wheel of back roller train.
J = 15 teeth of driving stud pinion wheel of back roller train.
L = 70 teeth of driven wheel on back roller.
M = 2½/3″ diameter of back roller.

Faller train.

N = 27 teeth of driving bevel to screws.
N^1 = 20 teeth of driving bevel to screws.
O = 18 teeth of driven bevel on screws.
O^1 = 20 teeth of ,, ,, ,,
P = ½″ pitch of screw for single can gill.
P^1 = ⅜″ pitch of *double threaded screw*, for double can gill box.

Front roller train.

S = 30/36 teeth on driving or draft wheel to front roller.
T = 60/70 teeth of driven wheel on front roller.
U = 2/2½″ dia. of front roller.

Draft in double can gill box =

$$\frac{\text{More}}{\text{Less}} = \frac{\text{Dia. front rollers}}{\text{Dia. back rollers}} = \frac{I \times L \times S}{G \times J \times T}$$

$$\frac{\text{More}}{\text{Less}} = \frac{2}{2{\cdot}5} \times \frac{70}{26} \times \frac{70}{15} \times \frac{30}{60} = 5 \text{ draft.}$$

Eliminate the draft wheel, the variable factor, from the calculation, then the resultant quotient will give the standard number of gauge point thus :—

$$\text{Gauge Point} = \frac{2}{2{\cdot}5} \times \frac{70}{26} \times \frac{70}{15} \times \frac{1}{60} = \frac{1}{6}$$

Then (1) to find the change wheel divide the draft required by the gauge point.

Draft required equals 5 and $5 \div \frac{1}{6} = 5 \times 6 = 30$ teeth.

And (2) to find the draft, multiply the number of teeth in the change wheel by the gauge point.

No. of teeth in change wheel equals 30, then $30 \times \frac{1}{6} =$ 5 draft.

If the lead of the fallers is required then the method of solution is as follows :—

Lead of fallers=

$$\frac{\text{More}}{\text{Less}} = \frac{\text{Pitch of Screw } P^1}{\text{Circe. of back roller M}} \times \frac{I \times L \times N^1}{G \times J \times O} =$$

$$\frac{\text{More}}{\text{Less}} = \frac{3}{8} \times \frac{2}{1} \times \frac{2 \times 7}{5 \times 22} \times \frac{70 \times 70 \times 20}{26 \times 15 \times 20} = 1{\cdot}2$$

44. Calculation of draft in drawing boxes. Fig. 257 is a diagram of the detached parts of the mechanism in a drawing box, which modify and produce the different drafts required of the machine. A is the bottom front roller, B the top front roller, C the draft change wheel, adjustably fastened to the end of the front roller. The teeth of wheel C intermesh with and drive the stud wheel D compounded with the stud pinion E. The spur teeth of E gear into and drive the

back roller wheel F which is fastened to the end of the back shaft G. The three top back rollers are shown at G^2, G^3 and G^4.

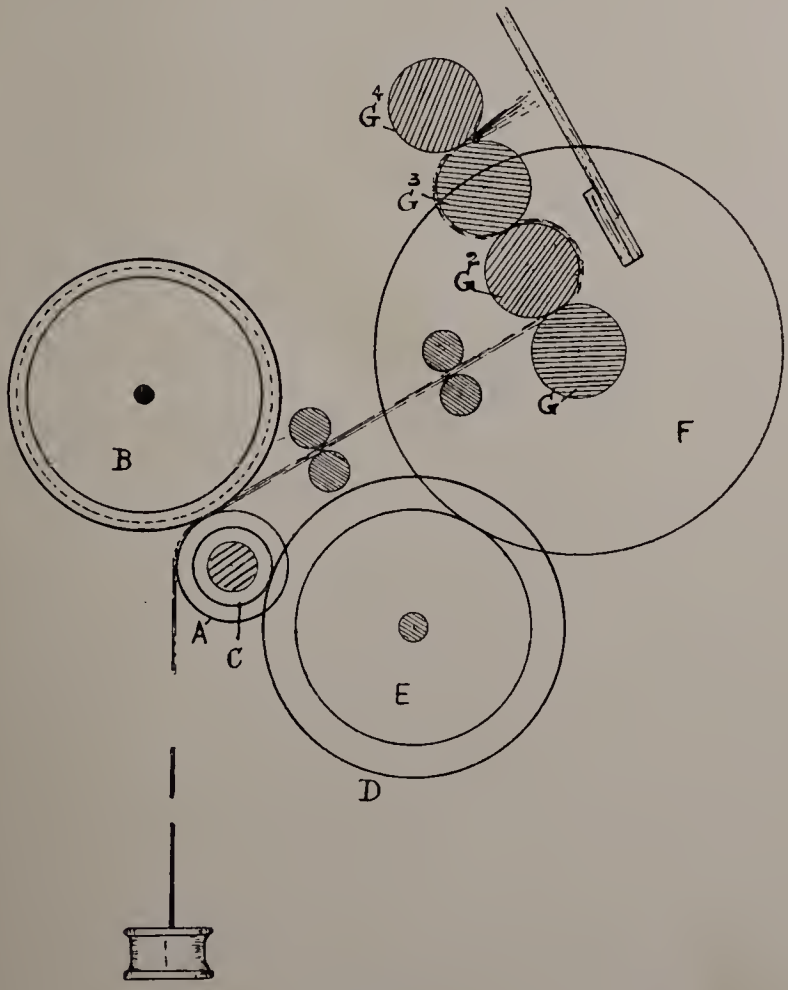

Fig. 257

The size of the wheels and dimensions of the rollers are as follows :—

A = 4″ dia. front roller.
C = 40 teeth in the draft change wheel = Driver.
D = 100 teeth in the stud wheel = Driven.
E = 83 teeth in the stud pinion = Driver.
F = 120 teeth in the back roller wheel = Driven.
G = $2\frac{1}{2}$″ dia. of the back roller.

Obviously any modification, of the above sizes of wheels or rollers, which tends to reduce the surface speed of the back rollers will increase the amount of *draft* in the box and vice versa, e.g. any increase in the size of the wheel C or the stud pinion E would increase the speed of the back rollers and give less draft whilst any increase in the driven wheels D or F would conversely decrease the speed of the back rollers and produce a greater amount of draft in the box, thus :—

$$\text{Draft in drawing box.} \quad \frac{\text{More}}{\text{Less}} = \frac{\text{Dia. A Front roller}}{\text{Dia. G. Back roller}} \times \frac{\text{Stud Wheel D}}{\text{Stud Wheel E}} \times \frac{\text{Back roller Wheel F}}{\text{Front roller Wheel C}} = \text{Draft.}$$

$$= \frac{\text{More}}{\text{Less}} \quad \frac{4}{2{\cdot}5} \times \frac{100}{83} \times \frac{125}{40} = 6.$$

Eliminate the value of the change wheel from the solution, and the result will be the gauge point, thus :—

$$\text{G.P.} = \frac{\text{More}}{\text{Less}} \quad \frac{4}{2{\cdot}5} \times \frac{100}{83} \times \frac{125}{1} = 241.$$

Then to find the required amount of draft divide the gauge point by the change wheel and conversely divide the gauge point by the draft when it is required to find the change wheel.

45. Calculation of draft in Roving box.

In the roving and reducer boxes the material received is comparatively fine and even, and the gradual increased amount of twist previously given now facilitates the giving of larger drafts. When properly adapted to the material, these drafts make the individual fibres lie much straighter and distribute any remaining irregularities over a greater length of material produced. The mechanical method of altering and calculating the amount of draft in the roving and reducer boxes is however the same as for the drawing boxes. The dimensions of the rollers and size of wheels in the *draft* train for a Dandy roving box is given herewith.

A = 4″ dia. of front roller.
G = 2″ dia. of back roller.
C = 43 teeth in draft change wheel on front roller.
D = 100 teeth in the stud wheel.
E = 83 teeth in the stud pinion.
F = 123 teeth in the back roller wheel.

Therefore the draft in the rover=

$$\frac{\text{More}}{\text{Less}} = \frac{A \times D \times F}{G \times E \times C} = \text{draft.}$$

$$\frac{\text{More}}{\text{Less}} = \frac{4''}{2''} \times \frac{100}{83} \times \frac{125}{43} = 7.$$

Leaving the value of the change wheel out ot the calculation the result will serve as a gauge point, thus :—

$$\text{Gauge point} = \frac{4''}{2''} \times \frac{100}{83} \times \frac{125}{1} = 301.$$

$$\text{Then draft required} = \frac{\text{G.P.}}{\text{Chge. wheel}} = \frac{301}{43} = 7.$$

or Change Wheel required $= \frac{\text{G.P.}}{\text{draft}} = \frac{301}{7} = 43.$

46. Calculation of twist in Two-Spindle Gill box.

The parts of mechanism which control the twist in this box are shown at Fig. 258. The diagram is an elevation as seen from the pulley side of the machine. A is the pulley shaft; B a driving pulley fast on the shaft A; a driving belt C, communicates motion from B to a pulley D, free to rotate on an adjustable stud E. F is the twist change wheel adjustably fastened to the boss of pulley D. The teeth of F intermesh with those of a spur wheel G compounded with the cylinder shaft H, supported and free to rotate between the gables of the machine. Compounded with the cylinder shaft H is a pulley I, denominated the cylinder pulley. A belt, J, communicates rotary motion to a flange pulley K known as the spindle pulley. The base of the spindle L is square in cross section and fits into a like square formed in the socket of the pulley K and by which means the spindle is rotated or detached at will. Compounded with the spindle L is the flyer M around which the slubbing N is twisted and wound on to the bobbin O. This bobbin fits loosely on the spindle L and is supported and reciprocated in a vertical plane by the builder plate P. R is a spur pinion fastened to the pulley shaft A on the remote or opposite side of the machine. The teeth of R gear into and drive a like spur pinion wheel S on the main driving or upper back shaft T. Fastened on the remote end of shaft T is a pinion, change or draft wheel U which communicates, through two single intermediates, rotary

motion to the front roller wheel v fastened to the end of the bottom fluted roller w. The fluted, top front roller is shown at x.

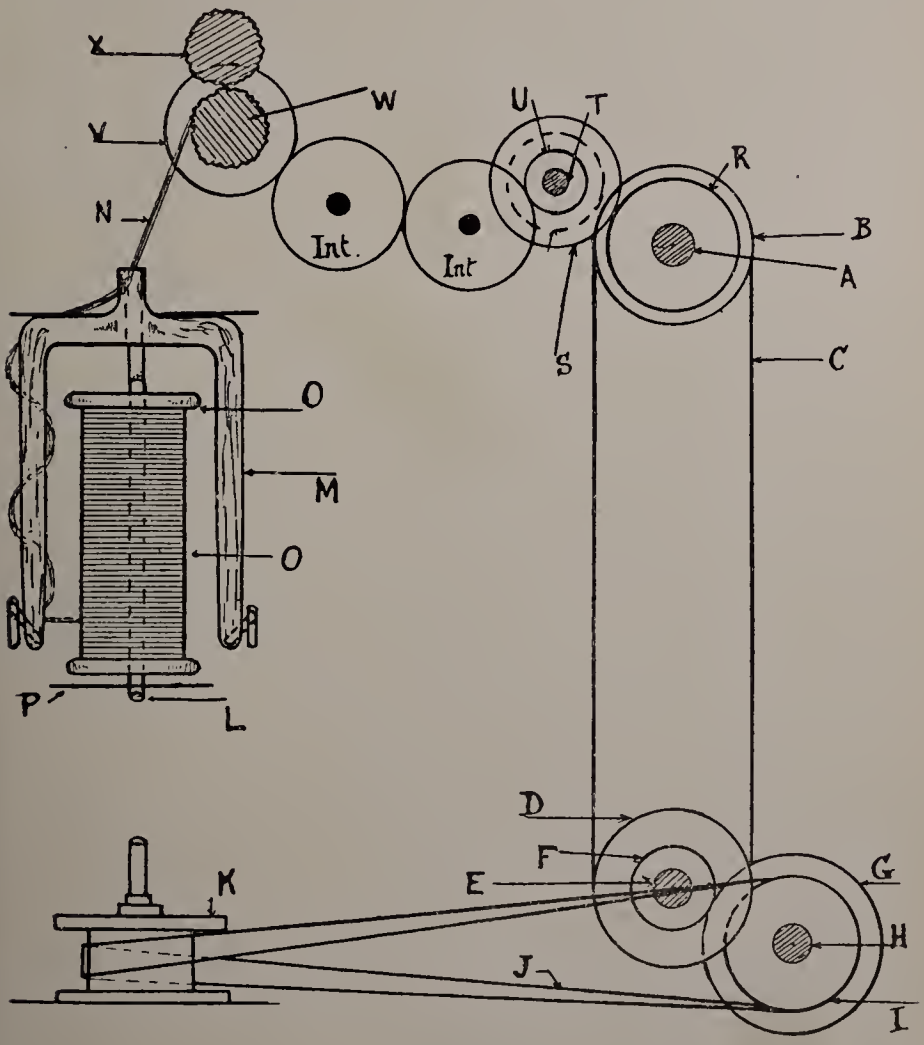

Fig. 258.

The numerical value of all the factors in the foregoing diagram which affect the twist calculations are :—

A = Pulley shaft.
B = 9″ shaft pulley—driver.
D = 9″ twist pulley—driven.
E = Adjustable stud.
F = 40 Twist change wheel driver to spindle.
G = 60 " Cylinder " wheel—driven.
H = " Cylinder " shaft.
I = 6″ Cylinder pulley
J = Driving belt to spindles.
K = 6″ dia. of spindle pulley.
R = 60 teeth—driver.
S = 60 ,, —driven.
T = Upper back shaft.
U = 30/50 pinion driving front roller.
V = 60 teeth in front roller wheel.
W = 2″ dia. front roller—6·3″ circumference.

The twist put into the slubbing is expressed by the number of turns of the spindle during the delivery of 1 yard or 1 inch of slubbing by the front roller. This number is determined by dividing the surface speed of the front rollers by the number of revolutions of the spindle in the same unit of time—usually one minute. But since the spindles and front rollers are both driven, through their respective train of wheels, from the same pulley shaft A, then whatever its speed may be, it must influence both spindles and front rollers alike and so this shaft may be conveniently taken as a basis from which to begin to calculate.

First, all the driving factors which communicate motion to the spindles, would, if increased, produce more speed in the spindles and therefore more twist.

Conversely, all the driven factors, if increased, would produce less speed in the spindles and therefore more twist.

Second. All the driving factors which communicate motion to the front rollers would, if increased, produce a greater surface velocity and consequently the amount of twist put into the slubbing would be less. Conversely, all those driven factors would, if increased, produce less speed in the front rollers and therefore more twist in the slubbing.

The solutions of problems of this class may therefore be arranged (1) with all the driving factors to the spindles and all the driven factors to the front rollers in the numerator and (2) with the driven factors to the spindles and the driving factors to the front rollers and the circumference of the front roller in the denominator—the result will be the number of turns of twist put into the slubbing. Then the twist formula will be as follows :

$$\frac{\text{More}}{\text{Less}} = \frac{B \times F \times I}{D \times G \times K} \times \frac{S \times V}{R \times U} \times \frac{1}{\text{Circe. ft. roller.}}$$

$$= \frac{9 \times 40 \times 6}{9 \times 60 \times 6} \times \frac{60 \times 60}{60 \times 40} \times \frac{1}{6 \cdot 3} = 0 \cdot 16 \text{ turns per inch.}$$

or alternatively turns per inch equal

$$\frac{\text{Revolutions} \times \text{Circumference of front roller}}{\text{Revolutions of Spindle.}}$$

47. Calculations on Speed of Spindles in Gill boxes. Given the speed of the line shaft and the dimension details which drive the spindles as in Fig. 258, viz: Revolutions of line shaft 150 ; diameter of pulleys A on machine 10 inches ; pulleys B and C, 9 inches ; stud

pinion F, 40 teeth ; cylinder pinion G, 60 teeth ; cylinder pulley I, 6 inches diameter and whorl on spindle 6 inches. Calculate the revolutions per minute of the spindles in the two spindle gill box.

$$\text{Then Revs. of Spindle per minute} = \frac{\text{Revs. of Line Shaft} \times \text{Dia. of Drum} \times B \times F \times I}{\text{Driven} \times A \times C \times G \times K} = \frac{150 \times 12 \times 9 \times 40 \times 6}{1 \times 10 \times 9 \times 60 \times 6} = 120$$

48. Calculation of Twist in the Drawing Boxes. The principle of calculating the required amount of twist in the drawing boxes is the same as for the two spindle gill box. The arrangement of the mechanism designed for this purpose is however somewhat different.

Fig. 259 shows in elevation, the essential features of the mechanism involved. The operative details areas follows :—A is the machine pulley in the pulley shaft B and V is the belt which drives the same. A spur pinion C on shaft B, drives, through the intermediate wheel D, the twist change wheel E fastened to the "cylinder" shaft G. Compounded with shaft G is the "cylinder" pulley H which communicates motion, through the belt I to the flange spindle pulley J. The spindle is shown at K, the flyer at L, the bobbin at M and the slubbing at N. The front roller is shown at O and the front roller wheel at P. A spur change pinion, Q, is adjustably fastened to the boss of the pulley S which is supported and free to rotate on the adjustable stud R. The spur pinion Q drives the front roller wheel P. Rotary motion is communicated to the pulley S through the belt T and

the pulley U compounded with the pulley shaft B. The variation in the twist is obtained by varying the speed of the spindle.

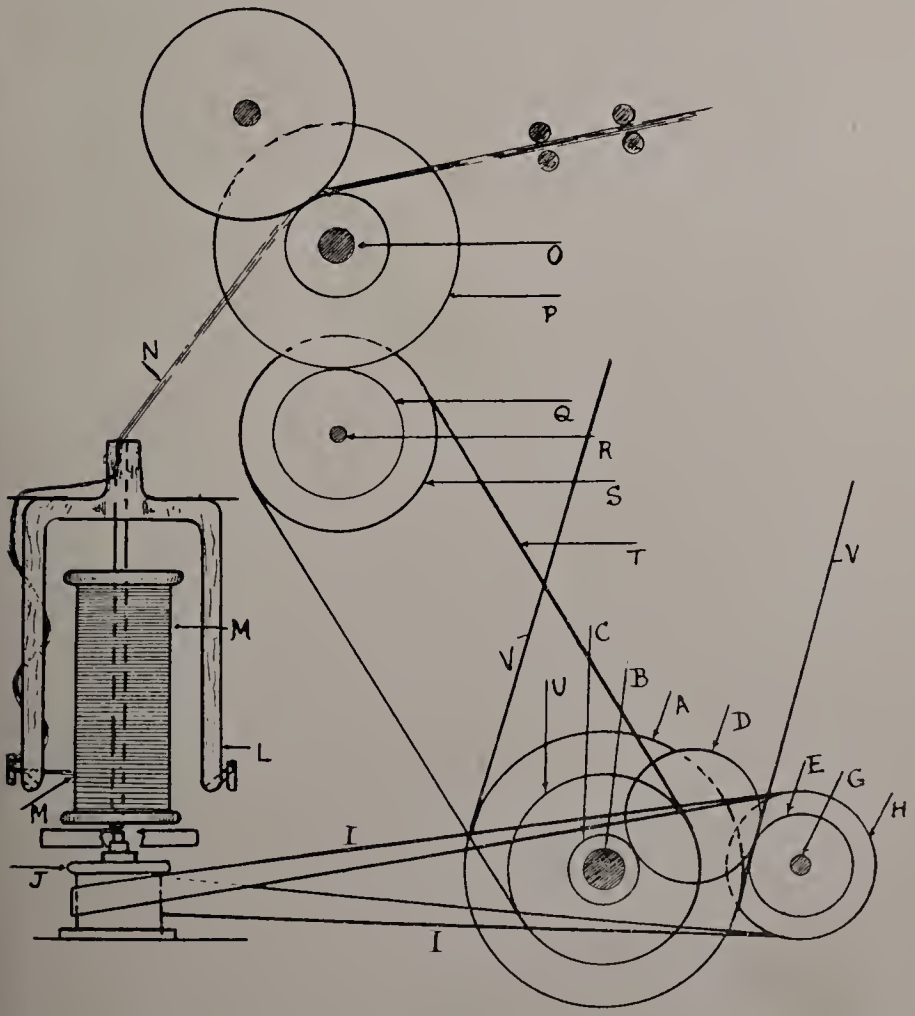

Fig. 259

The numerical values of the different parts which affect the calculation are as follows :—

C = 50 teeth.
E = 40 teeth change pinion for speed of spindles.
H = $6\frac{1}{2}$″ cylinder pulley.
J = $6\frac{3}{4}$″ spindle pulley (whorl).
O = 4″ circumference of front roller.
P = 155 teeth, front roller wheel.
Q = 45 teeth change pinion for altering the speed of the front roller.
S = 12″ diameter.
U = 9″ diameter.

The twist calculation may be evolved thus—(1) All the driving factors to the spindles and all the driven factors to the front rollers of the above train, if enlarge,d will give more twist. The product of these therefore constitutes the numerator.

(2) All the driven factors to the spindles and all the driving factors to the front rollers will, if enlarged, together with the circumference of the front rollers, give less twist. The product of these factors therefore constitute the denominator of the fractional equation thus :—

Formula for finding the amount of twist in Drawing boxes—

$$\frac{\text{More}}{\text{Less}} = \frac{C \times H}{E \times J} \times \frac{S \times P}{U \times Q} \times \frac{1}{\text{Circe. of O.}} = \text{Twist.}$$

$$\frac{\text{More}}{\text{Less}} = \frac{50 \times 6\frac{1}{2}}{40 \times 6\frac{3}{4}} \times \frac{12}{12} \times \frac{155}{45} \times \frac{1}{12 \cdot 6} = 0 \cdot 33$$

The spindles and front rollers are driven from separate shafts G and B each being provided with its own change

wheel. It is therefore possible to alter the twist by modifying the speed of the spindles or front rollers, but it is preferable to change the speed of the spindles because this arrangement does not interfere with the turn off of the box or with the supply to the next box.

If the surface speed of the front roller is maintained at a uniform rate then a *gauge point*, for readily finding the amount of twist required, or the change wheel, may be ascertained by omitting from the calculation the value of the spindle change wheel C thus :—

$$\text{G.P.} = \frac{50 \times 6\frac{1}{2} \times 12 \times 155}{(\text{E}) \times 6\frac{3}{4} \times 12 \times 45} \times \frac{1}{12 \cdot 6} = 13 \cdot 2$$

$$\text{Then change wheel required} = \frac{\text{G.P.}}{\text{Twist}} = \frac{13 \cdot 2}{0 \cdot 33} = 40.$$

$$\text{And twist required} = \frac{\text{G.P.}}{\text{Given change wheel}} = \frac{13 \cdot 2}{40} = 0 \cdot 33$$

49. Calculation of Speed of Spindles in Drawing Box. Given the speed of the line shaft as 150 revolutions per minute, the driving drum on same 16 inches, pulley A on machine 12 inches diameter, change pinion C Fig. 259 which drives the cylinder shaft 50 teeth, the change pinion E on cylinder shaft 40 teeth, cylinder pulley H $6\frac{1}{2}''$, whorl J $6\frac{3}{4}''$ diameter. Calculate the speed of the spindles.

$$\text{Then Revs. of Spindles per minute} = \frac{\text{Revs. of line shaft} \times \text{Dia. of Drum} \times \text{C} \times \text{H}}{12 \times \text{A} \times 40 \times 6\frac{3}{4} \times \text{E} \times \text{J}} = 150 \times 16 \times \frac{50 \times 6\frac{1}{2}}{12 \times 40 \times 6\frac{3}{4}} = 240$$

50. Calculation of Twist in the Dandy Rover. In the drawing boxes where the amount of twist put into the slubbing is relatively small, the necessary variation of twist is satisfactorily obtained by altering the speed of the spindles. The speed of the front drawing rollers remains constant for the range of drafts in each drawing box. In the rover, reducer and finisher boxes the increase of twist is greater than can be accommodated by any alteration in the speed of the spindles.

The retention of the spindles at a uniform speed, when an increase in the amount of twist is required can therefore only be obtained by a reduction in the rate of delivery by the front rollers and a corresponding reduction in the turn off. The difficulty is overcome by increasing the number of spindles so as to keep up with the drawing.

The relatively large number of spindles required in the roving is further increased by the great variety of yarn counts which are spun from the same quality of top.

The details of mechanism which produce the twist in the Dandy roving box are shown at Fig. 260, and a perspective view of a Dandy Rover with Rabbeth Spindles and Tension Pulleys is shown at 260A. A is the machine pulley on shaft B. C is a pinion spur wheel which drives through the intermediate wheel D, the stud wheel E, on the adjustable stud F. Adjustably compounded with the boss of the stud wheel E is a change stud pinion G, denominated the twist change wheel.

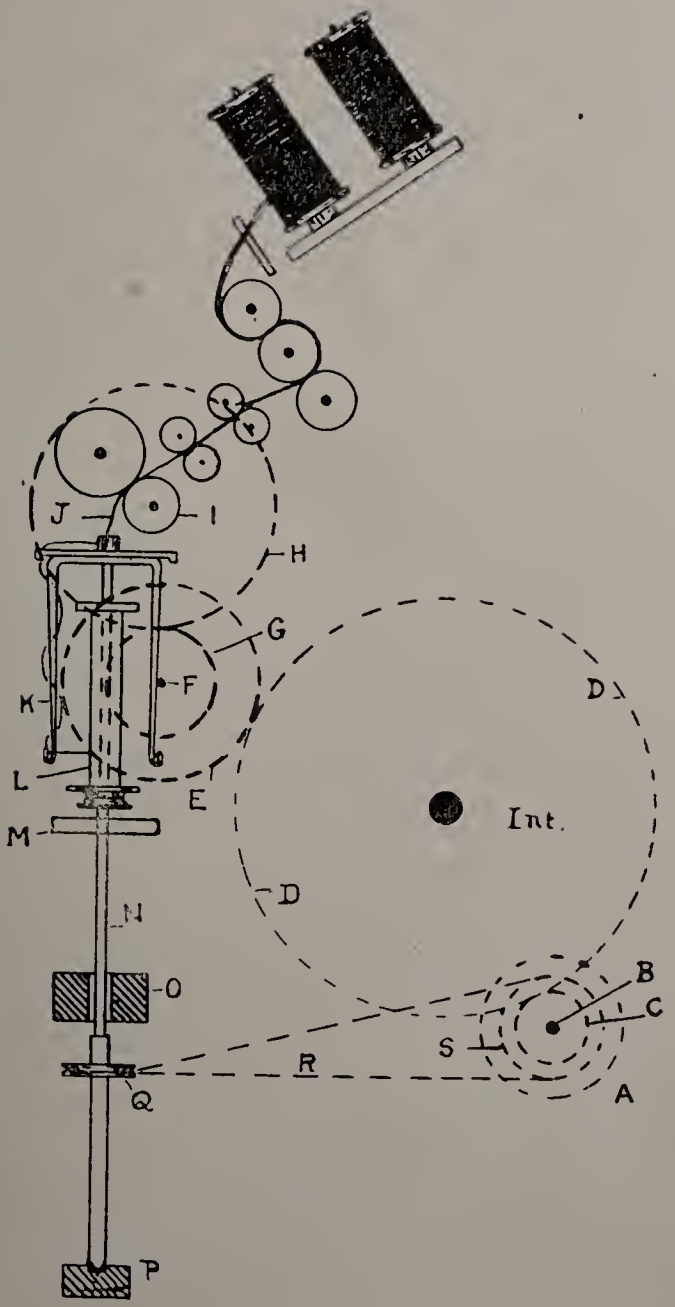

Fig. 260.

The teeth of the change wheel G intermesh with those of the front roller wheel H fastened to the front roller I.

The rove is shown at J and the flyer at K. On this box the flyer is detachable at will and the bobbin L is placed on or taken off, from the top of the spindle. M is the lifter plate, N the spindle which is supported between the top rail O and the bottom or foot rail P. Brass cups—one for each spindle—are fixed to the bottom part of the foot rail P; these contain oil, and the base of the spindle which is cone shaped, rests and is free to rotate in it and the lubricant. The whorl on the spindle is shown at Q, the driving band or tape at R and the cylinder or spindle driving pulley at S.

An alternative arrangement of communicating motion to the front rollers is shown at Fig. 261 where it will be observed that the large intermediate and whorl D and the spur wheel E in Fig. 260 are respectively substituted by the belt or chain D^1 and the pulley E^1.

The remaining similar letters in both illustrations refer to corresponding details.

The arithmetical values of the factors which enter into the calculation are as follows:—

C = 60 teeth on cylinder end wheel.
E = 100 teeth stud wheel.
G = 30 teeth change twist wheel.
H = 125 teeth front roller wheel.
I = 4″ dia. front roller.
N = Spindle.
Q = 2″ dia. of whorl.
S = 8″ dia. of spindle pulley.

$$\frac{\text{More}}{\text{Less}} = \frac{S}{Q} \times \frac{E \times H}{C \times G \times \text{Circe. of } I} = \text{Twist.}$$

$$\frac{\text{More}}{\text{Less}} = \frac{8}{2} \times \frac{100 \times 125}{60 \times 30} \times \frac{1}{12{\cdot}6} = 2{\cdot}2$$

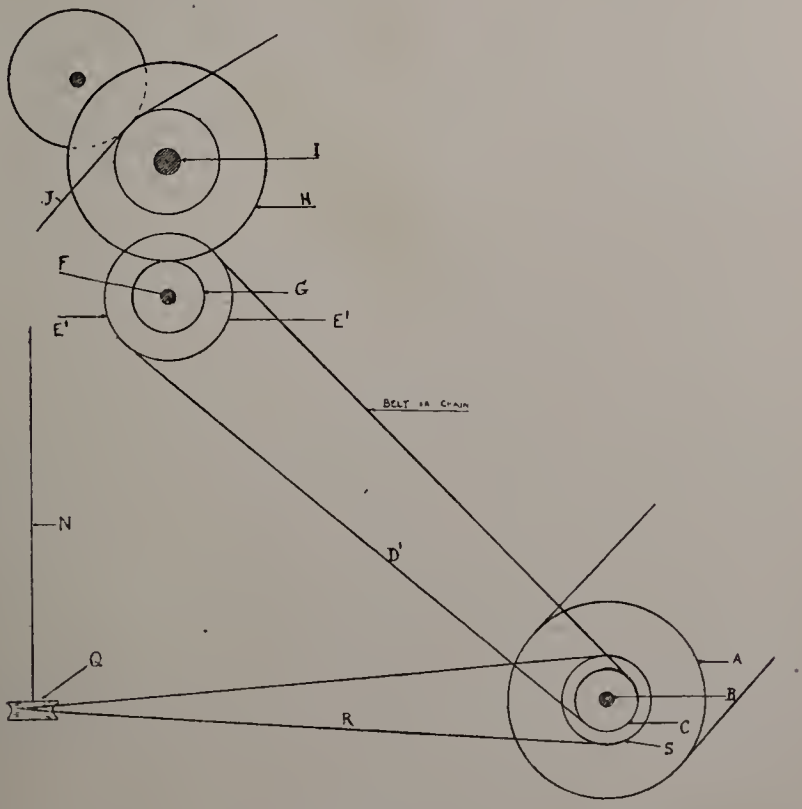

Fig. 261.

For Gauge point leave out the change wheel, then the resultant quotient divided by the twist required will give the change wheel or the gauge point divided by the change wheel will give the amount of twist produced.

51. Calculation of Speed of Spindles in Roving box. Given the speed of the line shaft at 150 revolutions per minute, the diameter of driving drum on same 12 inches, cylinder pulley S, Fig. 260, 8 inches, whorl on spindle 2 inches diameter, calculate the revolutions per minute of the spindles in the Dandy roving frame.

$$\text{Then Revs. of Spindles per minute} = \frac{\text{Revs. of line shaft} \times \text{Drum on same} \times S}{A \times Q} = \frac{150 \times 18 \times 8}{12 \times 2} = 900$$

CHAPTER XL.

RELATIVE PRODUCTIVE CAPACITY OF THE DRAWING BOXES.

THE regulation of the speed of these boxes in relation to each other and incidentally of the most suitable number of spindles required for each drawing process, should be carefully determined so that the work at each operation may be legitimately performed without any derangement of management, such as over-running and blocking, or shortage and delay, either of which causes considerable inconvenience, apart from the indifference which it tends to engender among the employees when machines are only irregularly run.

EXAMPLE 1.—Find the turn-off in lbs. per head for every 10 hours in the double can gill box when the following particulars are given. Diameter and speed of front roller 2″ and 80 revolutions respectively; the gilled sliver weighs 280 drams per 40 yds.
Then :—

(1) The number of yds. delivered per head per 10 hrs.

$$= \frac{\text{Front rollers. Circe.} \times \text{revs.} \times \text{mins.} \times \text{hrs.}}{\text{ins. per yd.}} = \frac{2 \times 3{\cdot}1416 \times 80 \times 60 \times 10}{36} = 8400 \text{ yds. approx.}$$

(2) Weight per yard of Sliver $= \frac{280}{40} = 7$ drams.

(3) Weight per head of Sliver $= \frac{8400}{1} \times \frac{7}{256} = 230$ lbs.

The whole may be expressed in a simple fractional equation thus :—

$$\frac{2 \times 3{\cdot}1416 \times 80 \times 60 \times 10 \times 280 \times 1}{36 \times 40 \times 256} = 230 \text{ lbs. approx.}$$

Example 2.—Find the gauge point for turn-off every 10 hours in the drawing boxes.

The solution of the foregoing problem is set out in detail and should be clearly understood. On reference to the solution it will be perceived that the factors 3·1416, 60 and 10 in the numerator and all the factors in the denominator are constant. If these constant factors are reduced to one simple equivalent, a standard number is obtained for *each inch* diameter of the front roller, which may in turn be used as a gauge point to simplify all such like problems, e.g. :—

$$\text{Gauge point} = \frac{\begin{matrix}\text{Circe. in inches front roller} \\ 3{\cdot}1416\end{matrix} \times \text{Mins.} \times \text{hrs.}}{\begin{matrix}36 \\ \text{ins. per yd.}\end{matrix} \times \begin{matrix}60 \\ 40 \\ \text{Length of Sliver}\end{matrix} \times \begin{matrix}10 \\ 256 \\ \text{drs. per lb.}\end{matrix}} = \frac{1}{195}$$

The product of the remaining and variable factors if divided by the denominator of the gauge point 195 will give the turn off *per head or spindle* in lbs. per 10 hrs. for any of the drawing frames, etc., e.g. :—

When applied to the foregoing examples—

$$\text{Weight per head} = \frac{\text{Dia.} \times \text{Rev.} \times \text{Weight of Sliver}}{195} = \frac{2'' \times 80 \times 280}{195} = 230 \text{ lbs. for 10 hrs.}$$

Further, if the delivery weight per head or spindle is known and the revolutions of the front roller are required, then the arrangement of the equation would be as follows :—

$$\frac{\text{Weight per head} \times \text{Denominator of G.P.}''}{\text{Dia. Roller} \times \text{Weight of Sliver delivered.}} = \frac{230 \times 195}{2 \times 280} = 80 \text{ revs. of front roller.}$$

EXAMPLE 3.—Find the weight in lbs. of sliver, slubbing, rove and yarn delivered by the following machines per head or spindle per 10 hrs. when the following particulars are given. Gauge point as above. Weight of combed top 280 drams=40 yards.

Machine.	Doublings.	Drafts.	Front rollers.	
			Dia.	Revs.
Double Can gill box	4	4	2″	64
Two Spindle gill box	4	5	2″	80
First drawing box	4	5	4″	50
Second ,, ,,	4	5	4″	31·6
Third ,, ,,	3	5	4″	34·6
First finisher	3	6	4″	26
Second ,,	3	6	4″	26·6
Reducer	2	6	4″	31·9
Rove	2	6	4″	20·5
Spinning	1	6	4″	25·5

1. Double head can gill box

Ends Draft

4 4

$\therefore$ Wt. of Sliver delivered

$= 280 \times \frac{4}{4} = 280$ drs.

Front roller Dia. Revs. drs. Weight per head.

$$\frac{2 \times 64 \times 280}{195} = 184 \text{ lbs.}$$

Gauge Point

2. Two Spindle gill box

Ends Draft.

4 × 5

$\therefore$ Wt. of Slubbing delivered

$= 280 \times \frac{4}{5} = 224$ drs.

Weight per Spindle.

$$\frac{2'' \times 80 \times 224}{195} = 184 \text{ lbs.}$$

3. Two Spindle drawing box

Ends. Draft.

4 × 5

$\therefore$ Wt. of Slubbing delivered

$= 224 \times \frac{4}{5} = 179$ drs.

$$\frac{4 \times 50 \times 179}{195} = 184 \text{ lbs.}$$

4. Four Spindle drawing box

Ends. Draft.

4 × 5

$\therefore$ Wt. of Slubbing delivered

$= 179 \times \frac{4}{5} = 143$ drs.

$$\frac{4 \times 31{\cdot}6 \times 143}{195} = 92 \text{ lbs.}$$

5. Six Spindle drawing box

Ends. Draft.

3 × 5

$\therefore$ Wt. of Slubbing delivered

$= 143 \times \frac{3}{5} = 86$ drs.

$$\frac{4 \times 34{\cdot}6 \times 86}{195} = 61 \text{ lbs.}$$

6. 1st Finisher 16 Spindles

Ends. Draft.

3 × 6

$\therefore$ Wt. of Slubbing delivered

$= 86 \times \frac{3}{6} = 43$ drs.

$$\frac{4 \times 26 \times 43}{195} = 23 \text{ lbs.}$$

7. 2nd Finisher 32 Spindles

Ends. Draft.

3 × 6

$\therefore$ Wt. of Slubbing delivered

$= 43 \times \frac{3}{6} = 21{\cdot}5$ drs.

$$\frac{4 \times 26{\cdot}6 \times 21{\cdot}5}{195} = 11{\cdot}7 \text{ lbs.}$$

8. Reducer 80 Spindles

Ends. Draft.

2 × 6

∴ Wt. of Roving delivered $= 21{\cdot}5 \times \frac{2}{6} = 7$ drs.

$$\frac{4 \times 31{\cdot}9 \times 7}{195} = 4{\cdot}6 \text{ lbs.}$$

9. Rover—256 Spindles

Ends. Draft.

2 × 6

∴ Wt. of Roving delivered

$= 7 \times \frac{2}{6} = 2{\cdot}3$ drs

$$\frac{4 \times 30{\cdot}5 \times 2{\cdot}3}{195} = 1{\cdot}5 \text{ lbs.}$$

10. Spinning—1800 Spindles

Ends. Draft.

1 × 6

50s Botany—16 turns

∴ Wt. of Yarn delivered

$= 2{\cdot}3 \times \frac{1}{6} = \frac{2{\cdot}3}{6}$ drs.

$$\frac{4 \times 25{\cdot}5}{195} \times \frac{2{\cdot}3}{6} = 0{\cdot}2 \text{ lbs.}$$

Weight of spun yarn per 10 hrs. for the total spindles
$= 1800 \times 0{\cdot}2 = 360$ lbs. Approx.

EXAMPLE 4.—*Find* the number of revolutions of the front roller, of the roving box and also of all the other machines in the set when given a single set of Botany drawing, particulars as follows :—

Ends.	Draft.			Dia. of bottom rollers.
2	6	Roving box	216 Spindles	4″
2	6	Reducer box	72 ,,	4″
3	6	2nd Finisher box	24 ,,	4″
3	6	1st Finisher box	10 ,,	4″
4	6	3rd Drawing box	6 ,,	4″
4	6	2nd Drawing box	4 ,,	4″
4	5	1st Drawing box	2 ,,	4″
4	5	2 Spindle Gill box	2 ,,	2″
4	4	Double Head Can Gill	2 heads	2″

Weight of rove 2·2 drams 40 yards, 81,840 inches of rove are required to be produced per minute, supplying approximately 1,600 spindles. For 50s counts and 16 turns per inch.

The plan of arrangement for the above set of drawing is supplied at Fig. 254.

The total length of rove produced per minute must be equal to the product of the circumference of the front roller, its revolutions per minute and the number of individual rollers or spindles thus :—

Length of rove produced = 81,840 inches per minute.

$$\therefore \text{ Revs. of Ft. roller in Rover.} = \frac{\text{Total length of rove}}{\text{Circe. of roller.} \times \text{Spindles}} = \frac{81{,}840}{4 \times 3{\cdot}146 \times 216} = 30$$

The total length of reduced slubbing required to be put up behind the rover box will be shorter according to the amount of draft and larger in proportion to the number of ends fed into the box thus :—

$$\text{Reducer} = \text{Total length of rove.} \; 81{,}840 \times \frac{2 \text{ ends up}}{6 \text{ draft}} = 27{,}280''$$

$$\text{Then the revs. of ft. roller of reducer} = \frac{27{,}280}{\text{Circe.} \; 12{\cdot}6 \times \text{Spindles.} \; 72} = 30.$$

In a similar way the length of material produced and required by each box together with the necessary revolutions of the front roller could be ascertained, but having once found the required number of revolutions of the front roller for any given box, the calculations for the remaining boxes in the set may be simplified as follows :—

Revolutions.

Rover 216 Spls. = Speed of bottom front roller in roving frame = 30

Reducer 72 Spls. = $\frac{\text{Revs. } 30 \times \text{Spls. ends up at rover } 216 \times 2}{72 \times \text{6 draft in rover}} = 30$

2nd Finisher 24 Spls. = $\frac{\text{Revs. } 30 \times \text{Spls. ends up at reducer } 72 \times 2}{24 \times \text{6 draft at reducer}} = 30$

1st Finisher 10 Spls. = $\frac{\text{Revs. } 30 \times \text{Spls. ends up at 2nd finisher } 24 \times 3}{10 \times \text{6 draft at 2nd finisher}} = 36$

3rd Drawing 6 Spls. = $\frac{\text{Revs. } 36 \times \text{Spls. ends up at 1st finisher } 10 \times 3}{6 \times \text{6 draft at 1st finisher}} = 30$

2nd Drawing 4 Spls. = $\frac{\text{Revs. } 30 \times \text{Spls. ends up at 3rd drawing } 6 \times 4}{4 \times \text{6 draft at 3rd drawing}} = 30$

1st Drawing 2 Spls. = $\frac{\text{Revs. } 30 \times \text{Spls ends up at 2nd drawing } 4 \times 4}{2 \times \text{6 draft at 2nd drawing}} = 40$

2 Spl. Gill box 2 Spls. = $\frac{\text{Dia. Revs. } 4 \times \text{Spls. ends up at 1st drawing } 40 \times 2 \times 4}{2 \times \text{2} \times 5 \text{ draft at 1st drawing}} = 64$

Dble Can Gill box 2 heads = $\frac{\text{Dia. Revs. } 2 \times \text{2 Spls. gill box. } 64 \times 2 \times 4}{2 \times 2 \times 5 \text{ draft at 2 Sple Gill box}} = 51$

Total length of sliver delivered per minute by the double can gill box $\therefore = 51$ revs. $\times$ 6·3″ circe. $\times$ 2 heads $= 642 \cdot 6''$.

EXAMPLE 5.—Find the number of revolutions of the front roller for each drawing box in a set of 50s crossbred drawing of which the following particulars are given :—

	Spindles.	Doublings.	Drafts	Front rollers. Dia.	Revs.
Rover ...	280	2	7	4″	30
Reducer ...	72	2	6	4″	
16 Finisher ...	32	3	6	4″	
8 Drawing ...	16	3	6	4″	
6 ,, ...	6	3	6	4″	
4 ,, ...	4	4	6	4″	
2 Spindle Gill ...	2	5	6	2″	
Double Can Gill ...	2 heads	6	6	2″	

Solution—Rover — Front roller = 30 Revs.

$$\text{Rover} = \text{Revs.} \times \frac{\text{Spindles}}{\text{Reducer Spindles.}} \times \frac{\text{Ends}}{\text{Draft at Rover.}}$$

Reducer 3×24 Spindles $= \frac{30 \times 280 \times 2}{72 \times 7} = 33{\cdot}3$,,

Finisher 2×16 Spindles $= \frac{33{\cdot}3 \times 72 \times 2}{32 \times 6} = 25$,,

3rd Drawing 2×8 Spindles $= \frac{25 \times 32 \times 3}{16 \times 6} = 25$,,

2nd Drawing 6 Spindles $= \frac{25 \times 16 \times 3}{6 \times 6} = 33{\cdot}3$,,

1st Drawing 4 Spindles $= \frac{33{\cdot}3 \times 6 \times 3}{4 \times 6} = 25$,,

2 Spindle Gill box $= \frac{25 \times 4 \times 4 \times 4''}{2 \times 6 \times 2''} = 66{\cdot}6$,,

Double Can Gill $= \frac{66{\cdot}6 \times 2 \times 5}{2 \times 6} = 55{\cdot}5$,,

EXAMPLE 6.—If the weight of the sliver at the first and single can gill box is 400 drams per 40 yds. and it is required to put 300 yds. into each can. What must be the net weight of sliver in each can ?

Then weight in lbs. $= \frac{400}{16 \times 16} \times \frac{300}{40} =$ 11 lbs. 11½ ozs.

Examples of Productive Capacity for Different Materials.

Example 7.—*Botany Set.*—Capacity, 3000 lb. per week of 48 hours average running, of rovings for counts from 36s to 60s: 2 revolving creels, 2 double-head can gill boxes, 8-in. pitch; 2, 2-spindle gill boxes, 12⅜-in. pitch, 14 by 9 bobbins; 2, 4-spindle drawing box, 12⅜-in. pitch, 14 by 9 bobbins; 1, 6-spindle weigh box, 10¼-in. pitch, 14 by 8 bobbins; 2, 8-spindle finishing boxes, 9¼-in. pitch, 12 by 6 bobbins; 2, 24-spindle second finishing boxes, 7-in. pitch, 9 by 5 bobbins; 4, 24-spindle reducers, 6-in. pitch, 7 by 4 bobbins; 10, 30-spindle rovers, 5½-in. pitch, 5 by 3 and 6 by 3½ bobbins.

Example 8.—*Cross-bred Set.*—Capacity, 1700 lb. per week of rovings from 24s to 32s counts: 1 revolving creel, 1 double-head can gill box, 1, 2-spindle gill box, 1, 4-spindle drawing box, 1, 6-spindle weigh box, 2, 6-spindle finishing boxes, 3, 28-spindle rovers.

Example 9.—*Set for English Weft.*—Capacity, 2700 lb. per week of rovings for 1/40s: 1 revolving creel, 1 single-can gill box, 1 double-head can gill box, 1, 2-spindle gill box, 1, 4-spindle drawing box, 1, 4-spindle weigh box, 1, 6-spindle drawing box, 2, 6-spindle finishing boxes, 3, 30-spindle roving boxes.

Example 10.—*Set for Hosiery.*—Capacity, 3800 lb. per week of roving from 10s to 20s counts: 1 revolving creel, 1 single-can gill box, 1 double-head can gill box,

2, 2-spindle gill boxes, 1, 6-spindle drawing box, 1, 8-spindle weigh box, 2, 8-spindle finishing boxes, 4, 30-spindle roving boxes.

EXAMPLE 11.—*Set for 24s Mohair.*—1 single-head coiler gill box, 1 double gill box, 1, 2-spindle gill box, 1, 2-spindle drawing box, 1, 2-spindle weigh box, 1, 4-spindle drawing box, 2, 4-spindle finishing boxes, 1, 24-spindle second finisher, 4, 24-spindle rovers. The pitch and bobbins in the latter sets are very similar to those in the first.

EXAMPLE 12.—A double set of drawing as below with drafts and doublings for a blend of tops of 7 inches average length ; weight of top 232 drams per 40 yds. ; weight of roving 4 drams for 40 yds. for 2/30s warp and $6\frac{1}{3}$ drams roving per 40 yds. for 1/18s. weft, produced 2500 lb. and 1570 lb. of the lighter and heavier roving respectively.

		Draft.		Ends.	
		Warp.	Weft.	Warp	Weft
1.	Two Double can Gill boxes...	6	6	5	5
2.	Two 2-Spindle Gill boxes ...	6	6	6	6
3.	Four Spindle Drawing boxes	6	6	6	6
4.	Six Spindle Weigh box ...	6	6	5	5
5.	Eight Spindle Drawing box...	6	6	4	4
6.	Two 8-Spindle Finishers ...	6	6	4	4
7.	Two 28-Spindle Reducers ...	6	5	3	4
8.	Three 30-Spindle Reducers...	6*	6	2*	2
9.	Eight 36-Spindle Rovers ...	6	6	2	2

* Modify to suit weight of roving.

CHAPTER XLI.

DIFFERENTIAL BOBBIN WINDING OR "CONE DRAWING."

52. *Modifying factors of "Bobbin Winding."* 53. *Increase in the diameter of the bobbin.* 54. *Relative reduced reciprocal traverse of the "builder."* 55. *Differential speeds of the bobbin.* 56. *Independent driving of the spindles and bobbin.* 57. *Driving of the Cones, front roller and differential mechanism.* 58. *Driving of the Litter Racks.* 59. *Functions of the Builder Mechanism.* 60. *Construction of Reciprocating Builder Mechanism.* 61. *Action of the Reciprocating Builder Mechanism.*

52. Modifying factors of "Bobbin Winding."

The mode of winding the slubbing and rove on to the bobbin by means of the flyer and controlled by the drag of different sizes and kinds of washers is common in worsted drawing for long and medium wools. For fine short stapled wools, however, the differential mechanism is well suited and largely adopted. In cotton and flax roving frames, this latter system is universally used. For fine short wools the frictional drag of flyer winding is too great. This excessive strain could only be neutralised by abnormally increasing the

twist of the rove the defects of which are too well known to require any repetition here.

Theoretically and ideally the bobbin must lag behind or keep in front of the rotating flyer, a constant distance which is just sufficient to take up the quantity of rove delivered by the front roller in any given unit of time.

Perfect winding is dependent on two important factors, *first*, the independent control and rotation of the bobbin at different speeds at will, and *second*, the correct reciprocation of the traverse of the bobbin builder at varying speeds to suit the increasing diameter of the bobbin. The former factor has to be modified so as to maintain a uniform tension on the constant delivery of the rove and the latter factor must be modified so as to place each successive wrap of rove contiguously adjacent and at the same angle as the previous wrap of rove.

The differential principle of motion, of which there are many ingenious varieties, is designed to satisfy the requirements of the foregoing essential factors.

53. Increase in the diameter of the bobbin. The increase in the diameter of the bobbin for each complete layer of rove must, as a natural consequence, be progressively increased by *twice* the diameter of the rove. e.g. Assume that the diameter of the barrel of the bobbin is 1 inch and the diameter of the rove $\frac{1}{16}$ inch ; then the diameter of the bobbin and rove for the complete sequence of layers for a 2 inch full bobbin will be as follows :—

Dia. of empty bobbin			1 inch or =	8	eighths
Then	,,	,,	1″+ 1 layer of rove	$\frac{1}{8}$″= 9	,,
,,	,,	,,	1″+ 2 layers of rove	$\frac{2}{8}$″=10	,,
,,	,,	,,	1″+ 3 ,, ,,	$\frac{3}{8}$″=11	,,
,,	,,	,,	1″+ 4 ,, ,,	$\frac{4}{8}$″=12	,,
,,	,,	,,	1″+ 5 ,, ,,	$\frac{5}{8}$″=13	,,
,,	,,	,,	1″+ 6 ,, ,,	$\frac{6}{8}$″=14	,,
,,	,,	,,	1″+ 7 ,, ,,	$\frac{7}{8}$″=15	,,
,,	,,	,,	1″+ 8 ,, ,,	1″=16	,,

The increase in diameter of the bobbin for each additional layer of rove is obviously in simple and direct arithmetical ratio and also the relative length of each successive layer of rove must also increase in the same ratio as the diameter of the bobbin, since their diameters and circumferences correspondingly vary.

54. Relative reduced reciprocal traverse of the "builder."

If, as shown above, the length of rove wrapped on to the bobbin for each successive layer increases in direct arithmetical ratio, then the rate of traverse of the builder plate with the bobbin, must be decreased in a corresponding but inverse ratio, otherwise the same uniformity and angle of wrapping will not be maintained.

Further, if it is assumed that *one unit of time* is required to wrap one inch of rove on to *one inch circumference of bobbin*, then, if the circumference of the barrel is three inches, three units of time will be required for each wrap and so on for 4, 5 or 6 inches in circumference, the units of time required for the traverse of the builder plate being directly proportionate to the increase in the circumference of the bobbin.

55. Differential speeds of the bobbin.

The attainment of the varying speeds of the bobbin is not as simple as is the traverse of the builder plate because the velocity ratio of the bobbin is dependent on two essential but diametrically opposed factors, first, the speed of the spindle and flyer which are constant, and second, the increasing diameter of the bobbin, which though arithmetically progressive is not *relatively* the same. e.g. In the particulars given on page 659 the diameter of the empty bobbin in eighths of an inch was 8 units whilst its diameters after receiving the first, second and third layers of rove were 9, 10 and 11 units respectively. The first increase in diameter is equal to $\frac{1}{8}$ of the original but the second increase is equal to $\frac{1}{9}$ of the new diameter and the third to $\frac{1}{10}$ of the previous diameter, which obviously, are *relatively* different in value. The circumferential speed of the bobbin must always bear the same definite ratio to the delivery of the front rollers and speed of the flyer, otherwise the strain upon the rove will not be constant, neither will the winding be correct and relatively uniform.

EXAMPLE 1. Given, for purposes of demonstration the speed of the spindles as 1000 revolutions per unit of time; the circumference of a bobbin when empty is 3 inches; the circumference of the full bobbin is 10 inches. Calculate (a) the traverse of the builder for each increase in the diameter of the bobbin from its initial to its final diameter and (b) the number of revolutions of the bobbin to the spindle for each given respective diameter of the bobbin, assuming the rove contains two turns per inch and that the *flyer leads*.

Solution (a)—

Let the full initial traverse of the builder = unit time.

Then rate of traverse of builder per inch of the circumference of the bobbin = $\frac{1}{3}$

Therefore three inches circe. of bobbin = 1″ = $\frac{3}{3}$

,, four ,, ,, = $1\frac{1}{3}$″ = $\frac{4}{3}$

,, five ,, ,, = $1\frac{2}{3}$″ = $\frac{5}{3}$

And at same rate—

ten ,, ,, = $3\frac{1}{3}$″ = $\frac{10}{3}$

Solution (b)—

Then one revolution of the empty bobbin takes up three inches of rove with two turns per inch, therefore 3 inches rove × 2 turns per inch, equals 6 revolutions of flyer and spindle to 1 revolution of the bobbin, or in tabulated form thus :—

			Revs. of Spindle.
1 Rev. of 3″ circe of bobbin	= 3×2 turns per in.	=	6
1 ,, 4″ ,, ,,	= 4×2 ,,	=	8
1 ,, 5″ ,, ,,	= 5×2 ,,	=	10
1 ,, 6″ ,, ,,	= 6×2 ,,	=	12
1 ,, 7″ ,, ,,	= 7×2 ,,	=	14
1 ,, 8″ ,, ,,	= 8×2 ,,	=	16
1 ,, 9″ ,, ,,	= 9×2 ,,	=	18
1 ,, 10″ ,, ,,	= 10×2 ,,	=	20

The revolutions of the spindles which are 1000 per unit of time are constant, but the bobbin must lag behind the flyer *two* revolutions (the number of turns per inch) for every inch of sliver delivered, because the function of the bobbin is only to take up the amount of rove delivered—it has nothing to do with putting

twist into the rove, that function belongs pre-eminently to the spindle and flyer. It therefore follows that the *revolutions per unit of time which the bobbin must lag behind* the spindle when the flyer leads equals :—

$$\frac{\text{Revs. of spindle per unit of time.}}{\text{Circumference of bobbin in inches} \times \text{turns per inch.}}$$

Therefore when the Circe of bobbin is 3 inches	$= \frac{1000}{3 \times 2}$	$= 166{\cdot}6 =$	Retardation of bobbin in revs. per unit time.	
4 inches	$= \frac{1000}{4 \times 2}$	$= 125$	,,	,,
5 ,,	$= \frac{1000}{5 \times 2}$	$= 100$	,,	
6 ,,	$= \frac{1000}{6 \times 2}$	$= 83{\cdot}3$	,,	
7 ,,	$= \frac{1000}{7 \times 2}$	$= 71{\cdot}4$	,,	
8 ,,	$= \frac{1000}{8 \times 2}$	$= 62{\cdot}5$	,,	,,
9 ,,	$= \frac{1000}{9 \times 2}$	$= 55{\cdot}5$	,,	,,
10 ,,	$= \frac{1000}{10 \times 2}$	$= 50$	,,	,,

The respective speeds of the bobbin for the given eight different diameters are therefore as follows :—

Then		Revs. of Spindles.	–	Retardation of bobbin.	=	Revs. of bobbin.
3″ Circe Bobbin	=	1000	–	166·6	=	833·4
4″ ,, ,,	=	1000	–	125	=	875
5″ ,, ,,	=	1000		100	=	900
6″ ,, ,,	=	1000	–	83·3	=	916·7
7″ ,, ,,	=	1000	–	71·4	=	928·6
8″ ,, ,,	=	1000	–	62·5	=	937·5
9″ ,, ,,	=	1000	–	55·5	=	944·5
10″ ,, ,,	=	1000	–	50	=	950

It will be observed that the amount of retardation from the empty to the full bobbin for the eight different circumferences in terms per cent. equals 16·6%, 12½%, 10%, 8·3%, 7·1%, 6·2%, 5·5% and 5% respectively. This point is perhaps better expressed by the graph Fig. 262. The essential points to be noted are that the

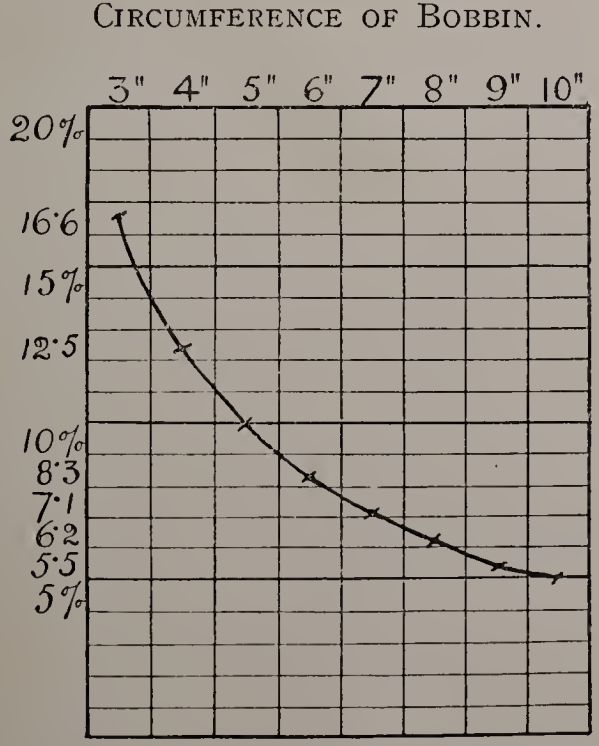

Retardation of Bobbin in terms per cent.

Fig. 262.

initial retardations are large as compared with the final and also that the amount of variation is not constant, even for uniform variation in the diameter of the bobbin.

Fig. 263 illustrates graphically the variation in the speed of the builder which, it will be seen, is uniform.

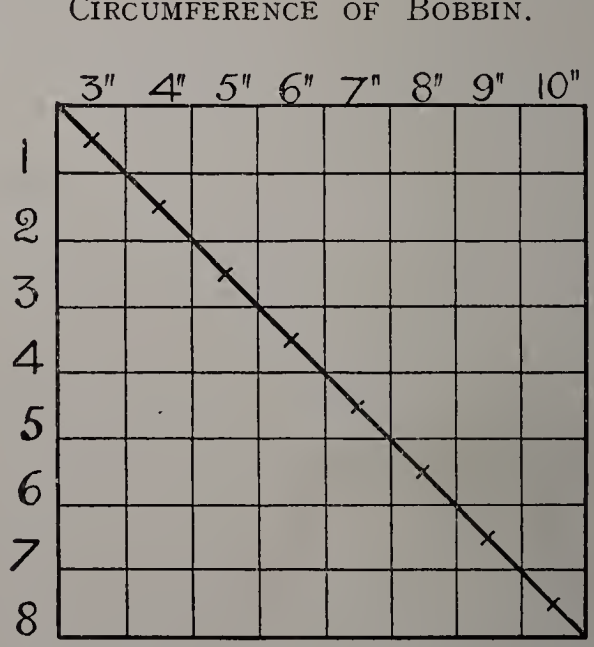

Relative units of time occupied by the "builder," for the full traverse and length of the Bobbin.

Fig. 263.

The Function and Construction of Cones.

The variation in the speed of the builder plate and also the necessary variation of speed to the crown wheel or its equivalent of the differential motion, are obtained directly from the cones or some equivalent substitute, e.g. a pair of expanding and contracting pulleys as used by Combe, Barbour, Ltd., Belfast.

The length and size of the cones are immaterial; they are governed by the space available but should be as

long as convenient and sufficiently large to prevent any slippage of the belt.

Cones—30 to 36 inches in length and 8 to 4 and 6 to 3 inches in diameter are frequently met with in practice. At *all* points of a true pair of cones the sum of the top and bottom diameters should be equal, and the speed of the bottom or driven cone should decrease in the inverse ratio to the proportional increase of the bobbin diameter. It can, however, be demonstrated that straight faced cones do not give the correct result when applied to the roving frames. To give the proper variation the driving cone is slightly concave and the driven cone is correspondingly convex (see Fig. 266). This external modification of the peripheries of the cones is due to the fact that the absolute increase in the diameter of the bobbin bears a ratio to its actual diameter which is not constant but continually diminishing in a slight degree.

Example 2. Assume that the diameter of the empty bobbin is 1 inch and when full, 3 inches. When the strap is on the large end of the driving and the small end of the driven drum, then the roving is being wound on to the bare barrel of the bobbin. The speed of the top cone is constant and makes 180 revolutions per minute. Ascertain the speed of the driven cone for the sixteen divisions given on page 666 with the bobbin leading. Then the speed of the bottom cone must be at the maximum, when the rove is winding on to the *one-inch* diameter of bare barrel thus :—

$$1'' \text{ dia. of bobbin} = \frac{\text{Top Cone revs.} \times \text{dia.}}{\text{Bottom Cone dia.}} = \frac{180 \times 8''}{4} = 360 \text{ revs. of bottom cone.}$$

Each of the remaining speeds of the bottom cone will require to be reduced, pro-rata but inversely, to the specified diameters of the bobbin as follows :—

Dia. of Bobbin = Ratio.								Revs. of Bottom Cone.
$1''$	=	8						= 360
$1\frac{1}{8}''$	=	9	$= \frac{360}{1} \times \frac{1}{1\frac{1}{8}}$	$= \frac{360}{1} \times \frac{8}{9}$		$= \frac{2880}{9}$	=	320
$1\frac{2}{8}''$	=	10	=	2880	÷	10	=	288
$1\frac{3}{8}''$	=	11	=	2880	÷	11	=	261·8
$1\frac{4}{8}''$	=	12	=	2880	÷	12	=	240
$1\frac{5}{8}''$	=	13	=	2880	÷	13	=	221·5
$1\frac{6}{8}''$	=	14	=	2880	÷	14	=	205·7
$1\frac{7}{8}''$	=	15	=	2880	÷	15	=	192
$2''$	=	16	=	2880	÷	16	=	180
$2\frac{1}{8}''$	=	17	=	2880	÷	17	=	169·4
$2\frac{2}{8}''$	=	18	=	2880	÷	18	=	160
$2\frac{3}{8}''$	=	19	=	2880	÷	19	=	151·6
$2\frac{4}{8}''$	=	20	=	2880	÷	20	=	144
$2\frac{5}{8}''$	=	21	=	2880	÷	21	=	137·1
$2\frac{6}{8}''$	=	22	=	2880	÷	22	=	130·9
$2\frac{7}{8}''$	=	23	=	2880	÷	23	=	125·2
$3''$	=	24	=	2880	÷	24	=	120

Then since the sum of the diameters of the two cones must be the same at all corresponding defined points, the ratio of the diameters of the two cones may readily be found by proportion as follows :—

Let x = the revs. of the driver cone
,, y = ,, ,, ,, driven ,,
,, m = ,, dia. of the driver ,,
,, n = ,, ,, ,, driven ,,

Formula—

1. Dia. of driven Cone n for 1″ dia. of bobbin $= \frac{x\,(m+n)}{x+y} = \frac{180 \times 12}{180+360} = 4''$

$\therefore$ Dia. of driving drum $= 12 - 4 = 8''$

2. Dia. of Cone n for $1\frac{1}{2}''$ dia. of bobbin $= \frac{180 \times 12}{180 + 240} = 5{\cdot}143''$

$\therefore$ Dia. of $m = 12 - 5{\cdot}143 = 6{\cdot}857''$

3. Dia. of Cone n for 2″ dia. bobbin $= \frac{180 \times 12}{180 + 180} = 6''$

$\therefore$ Dia. of $m = 12 - 6 = 6''$

4. Dia. of Cone n for $2\frac{1}{2}''$ dia. bobbin $= \frac{180 \times 12}{180 + 144} = 6{\cdot}6''$

$\therefore$ Dia. of $m = 12 - 6{\cdot}6'' = 5{\cdot}3''$

5. Dia. of Cone n for 3″ dia. bobbin $= \frac{180 \times 12}{180 + 120} = 7{\cdot}2''$

$\therefore$ Dia. of $m = 12 - 7{\cdot}2 = 4{\cdot}8''$

In a similar way the intermediate divisions may be calculated.

The cones may be constructed as follows :—

1. Draw a straight line each for cone n and m equal to the required length of the cones.
2. Use the lines as centres and measure across them the diameters for *each division* in the foregoing series for cones n and m respectively.
3. Connect the extremities of the above diameters and the result will be convex and concave cones as required.

Cone Drawing Driving Details.

56. Independent driving of the spindles and bobbin.

Fig. 264 shows detached details of the spindles and bobbins of the roving frame together with the arrangement for driving them independently of each other. 1 indicates the machine pulleys; B the pulley or frame shaft; 3 is a pinion which drives through the intermediate wheel 2 the spur pinion 4 compounded with the shaft 5 denominated the spindle shaft. An adjustable bevel wheel 6 is fastened to shaft 5 and drives the mushroom wheel 7 which in turn gears into and simultaneously drives through wheels 8 and 9 two continuous spindles 10 and 11 to which the wheels are fixed. The detachable flyer is shown at 12 and the bobbin at 13. Perforations are formed in the base of the bobbin, which fit over two short upright pegs projecting from the top side of a sleeve or bobbin socket 14 on which the bobbin rests and by which it is rotated. The bobbin socket is free to rotate and reciprocate vertically on the spindle 10.

Spur teeth 15 are cut in the bottom shoulder of the bobbin sleeve 14. Rotary motion is imparted to the socket and bobbin through the mushroom wheel 16 which in turn is driven from the bevel wheel 17 adjustably compounded with the bobbin shaft 18, pinion 19, intermediates 20 and 21 and socket wheel H which is loose on shaft B.

The velocity of the bobbin shaft is varied according to the required *differential* speeds of the bobbin for each successive layer of rove wound on to it.

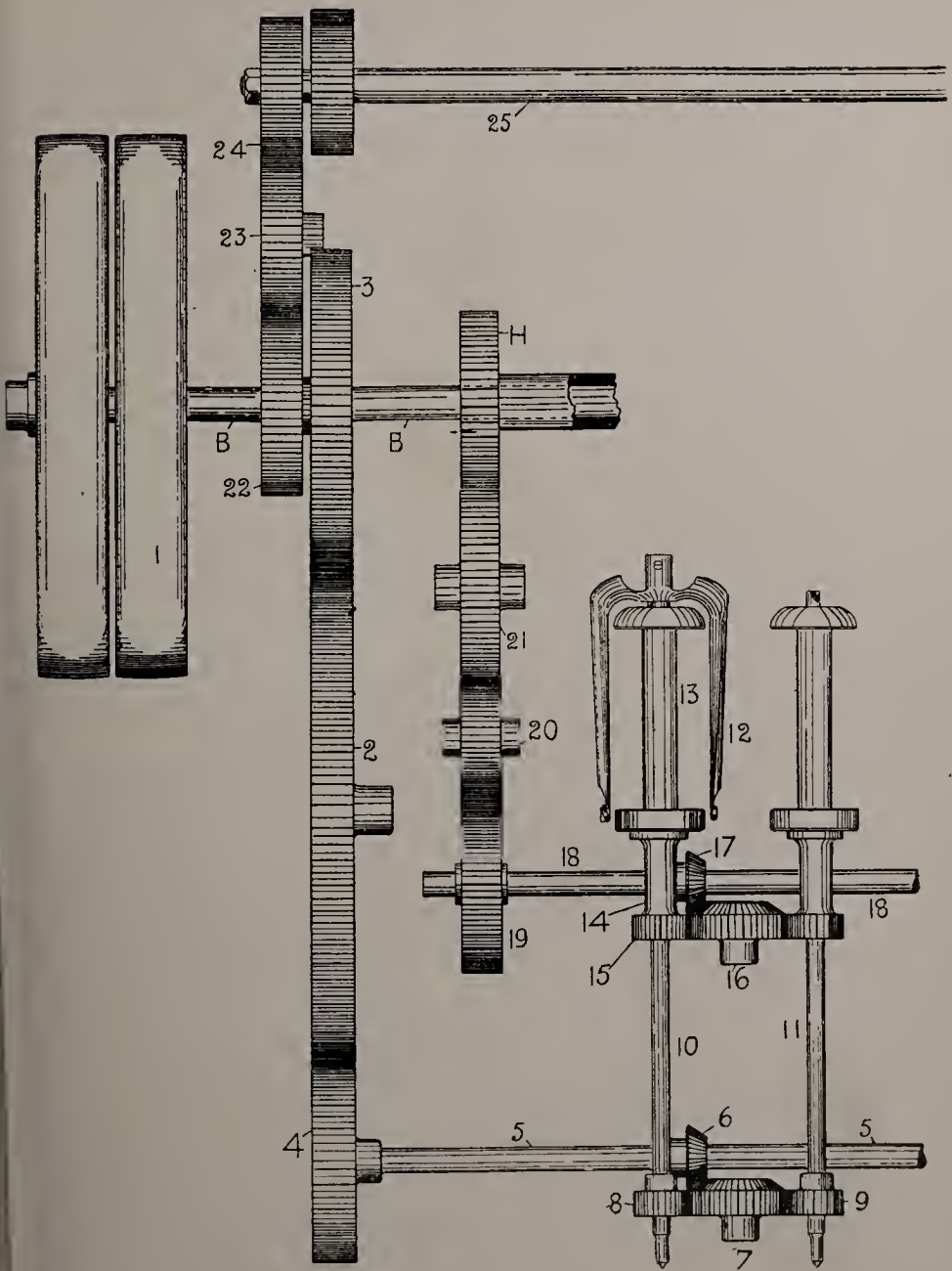

Fig. 264

The varied rotation of the bobbin shaft is obtained by the direct combination of a simple train of wheels with any one of the following detailed or other differential mechanisms. See also Chapter XLII.

The whole of the parts from bobbin 13 to the bobbin shaft 19 are supported and enclosed with the builder or lifter box and are free to reciprocate in a vertical plane with it as subsequently explained.

Compounded with the frame shaft B, is a spur pinion 22 which drives through an intermediate wheel 23 a spur pinion 24 fastened to the shaft 25 with which the top cone is compounded. In this machine the wheel 24 is the twist change wheel. The adjacent spur wheel on the right drives the front rollers through two single intermediate wheels not shown in this diagram.

57. Driving of the Cones, front roller and differential Mechanism.

Fig. 265 is a line diagram taken from one of Prince Smith's cone drawing boxes; it shows the method of driving the cones, also the front rollers and the ordinary differential motion.

The pulleys, frame shaft, driving pinion to spindles, socket wheel to bobbins and twist change wheel are shown at 1, B, 3,H, and 22 respectively which in this machine is the twist change pinion.

The change pinion 22 drives through an intermediate wheel 23 the spur pinion 24 compounded with the top cone shaft 25. A single pinion 28 on shaft 25 drives directly the front roller wheel 29 and the front roller 30 with which it is compounded.

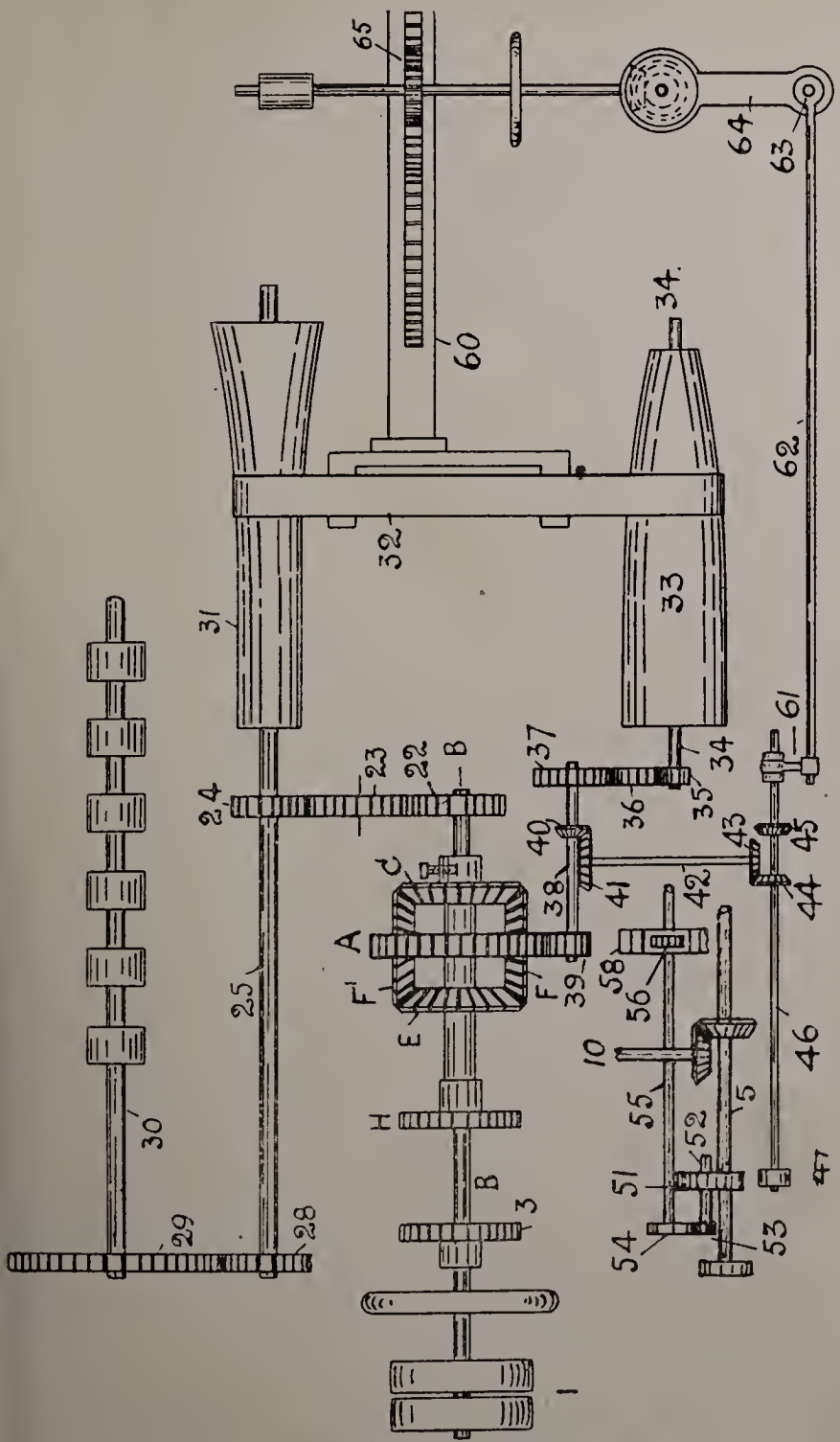
65
64
63
60
34
62
32
33
31
61
37
34
36
35
23
22
B
24
40
43
45
38
41
42
44
C
A
58
56
F'
F
39
25
E
10
46
55
5
H
52
30
51
B
3
29
28
54
53
47
1

Fig. 265.

The top cone 31, through a belt 32 communicates rotary motion to the bottom cone 33 and shaft 34. A small pinion wheel 35 drives, through an intermediate wheel 36, the spur wheel 37 and centre shaft 38. A spur pinion 39 on shaft 38 drives the crown wheel A of the differential mechanism which will be considered subsequently and explained in conjunction with other and newer types of differential mechanism.

58. Driving of the Lifter Racks.

The essential details of this part of the mechanism are shown in the following diagram, Fig. 266, which is a detached section in elevation from Jas. Mackie & Sons, Ltd., cone rover. Similar details are shown at Fig. 265. On centre shaft 38 a bevel pinion 40 gears into and drives a bevel 41 on the upright shaft 42. At the base of this shaft a bevel wheel 43 is fixed and drives at will, either of the two bevels 44 or 45, which are fast on shaft 46, denominated the reversing shaft. On this shaft a broad faced spur pinion 47 drives the lifter racks through the following train of wheels.

A stud wheel 48 is compounded with stud 49 and the stud pinion 50 which in turn drives, through the stud wheel 51, compounded with stud 52 and stud pinion 53, the large pinion 54 which is compounded with the rack shaft 55. Two rack pinions 56 and 57 gear into the teeth of two vertical racks 58 and 59 as shown. These racks are fastened to the builder box which encloses and supports all the parts, 13 to 19 inclusive, and reciprocates them according to the fineness of the rove. The necessary traverse changes are made by altering the traverse change wheel 50.

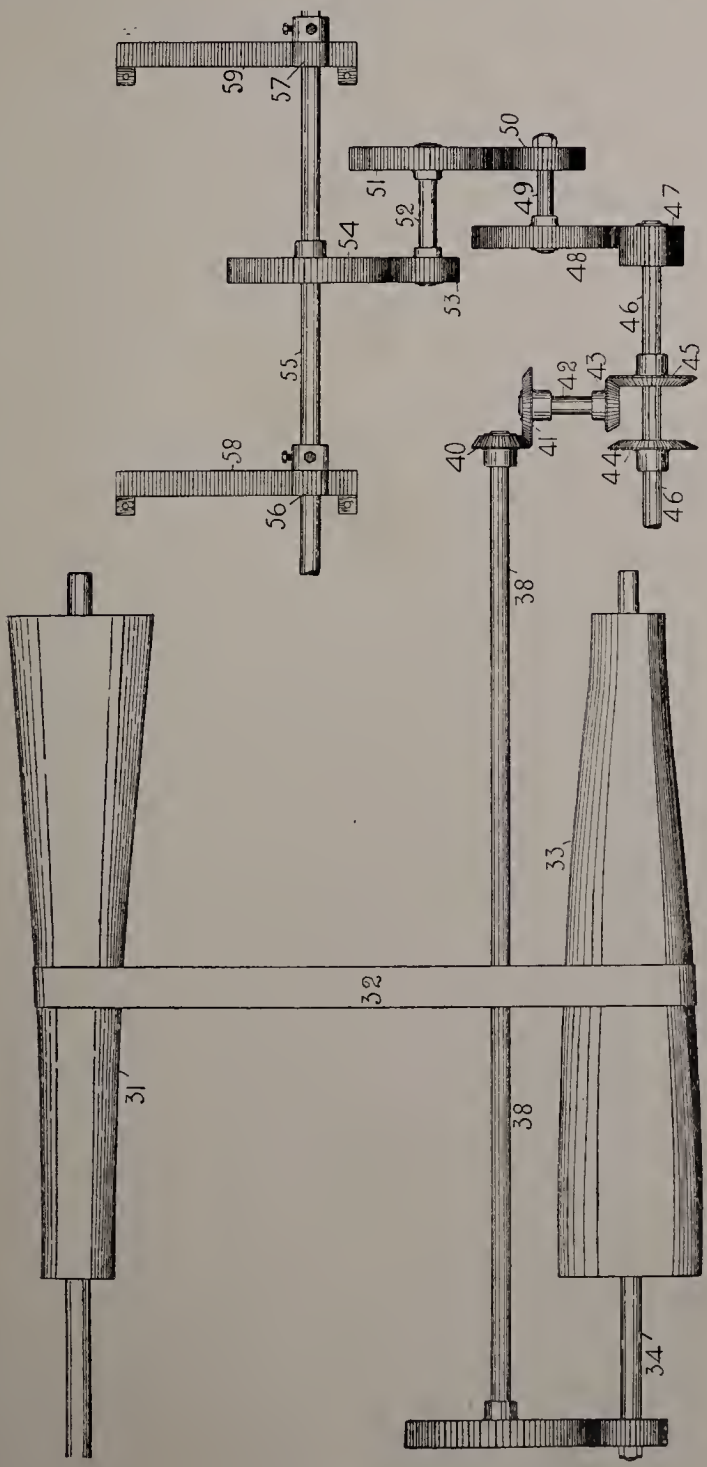
59
57
50
51
52
49
47
54
48
53
46
55
43
45
42
58
40
41
44
56
46'
38'
33
32
31
38
34

Fig. 266.

The cone belt 32 is combined with and controlled by the belt fork and rack 60. Fig. 265

The reversing rod 46 is combined by a duplex collar 61 with a reciprocating rod 62 in turn combined with the builder reciprocating mechanism, see Fig. 265.

Builder Mechanisms.

59. Functions of the Builder Mechanism. The builder mechanism as designed for cone drawing has to perform two distinct functions; *first* it has to traverse the builder plate alternately up and down, a distance equivalent to the length of the bobbin, and *second* it has to produce a definite and separate rate of velocity for each change of traverse and increased diameter of the bobbin.

The reversing motion of the builder must be performed as quickly as ever possible and thus obviate any tendency to dwell at either end of its traverse. There are several methods in practice of acccmplishing the above objects. They all contrive, through the builder plate at each end of its traverse, to initially set in motion mechanism designed to move the cone belt an equal predetermined short lateral distance along the cones to suit the required speed and diameter of the bobbin which, too, being correctly adjusted sympathetically varies the traverse of the builder plate to the same extent and pitch of layers of rove or slubbing.

Consequently, when once the frame is correctly adjusted and started, it is only necessary when making changes from one diameter of rove to any other to change

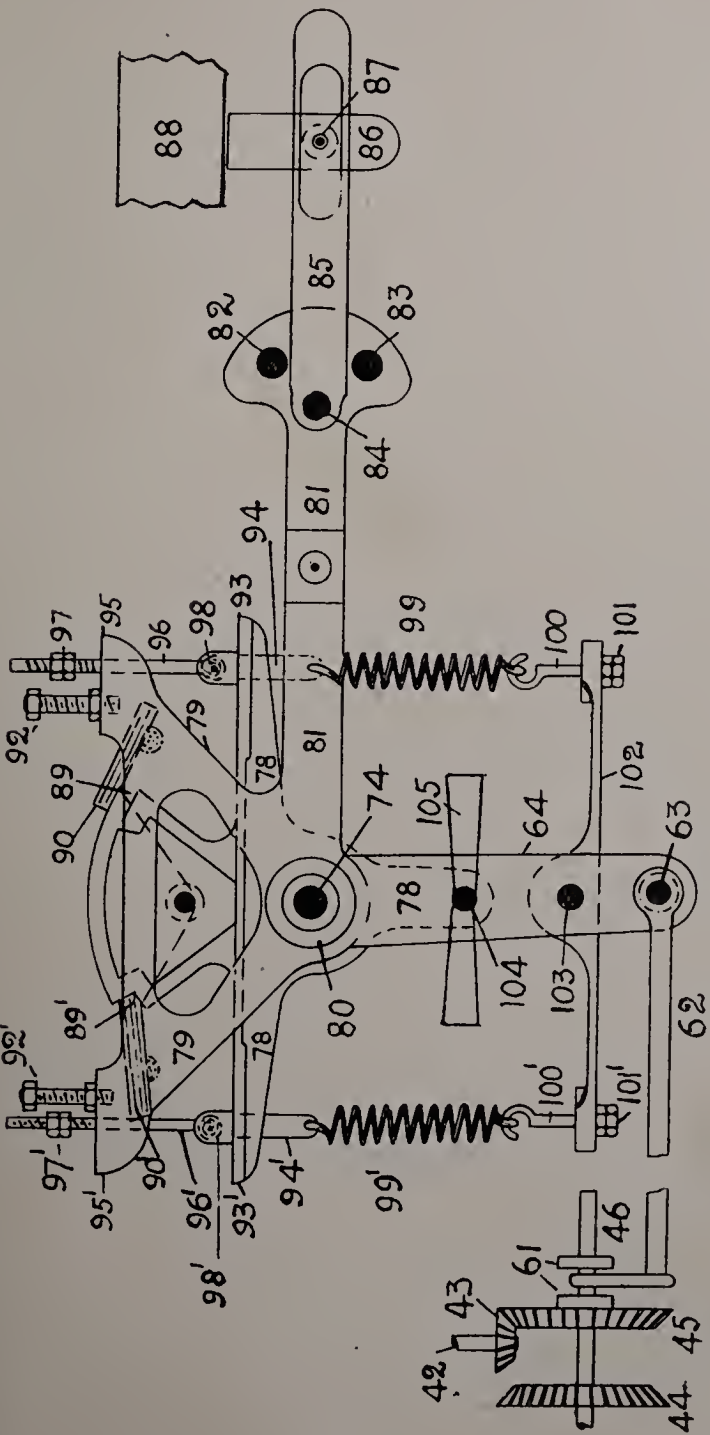
88
87
86
85
82
83
84
81
94
93
98
97
95
96
99
100
101
92
79
78
89
90
74
105
64
63
102
80
104
103
62
89'
92'
97'
95'
90'
96'
93'
98'
94'
99'
100'
101'
61
46
43
42
45
44

Fig 267.

the *index* or change ratchet wheel for any given size of bobbin.

60. Construction of Reciprocating Builder Mechanism. The reciprocation of the builder box and traverse of the cone belt are controlled by a double cradle rocking motion of which the essential parts are illustrated by the following diagrams of details from Prince Smith & Son's cone drawing box.

Fig. 267 shows the double rocking chair as viewed from the back of the machine.

Fig. 268 is a similar view of the traversing cone belt rack details.

Fig. 269 is a view at right angles showing part of the two foregoing diagrams in combination. The same numerals in each diagram and also in Figs 265 and 266 refer to corresponding details. The rack pinion shown at 65 is compounded with the vertical shaft 66 which is suitably supported and free to rotate in its vertical axis. 67 is a drum fixed near the top of shaft 66. A chain 68 is fastened to one end of the drum 67 and after passing a few times round the drum it is supported over a flanged pulley 69, mounted and free to rotate on a fixed stud as shown.

Suspended from the extremity of the chain 68 is a weight, 70.

Fixed near the base terminal of shaft 66 is a bevel wheel 72, the teeth of which intermesh with those of bevel 73 fixed to a short shaft 74, on which is also compounded a ratchet wheel 75. The shaft 74, is

rigidly supported and free to rotate in suitable bearings. Two pawl levers 76 and 77, alternately retain and release the ratchet wheel 75, between which momentary periods the vertical shaft 66 is free to rotate, due to the gravitation load of weight 70.

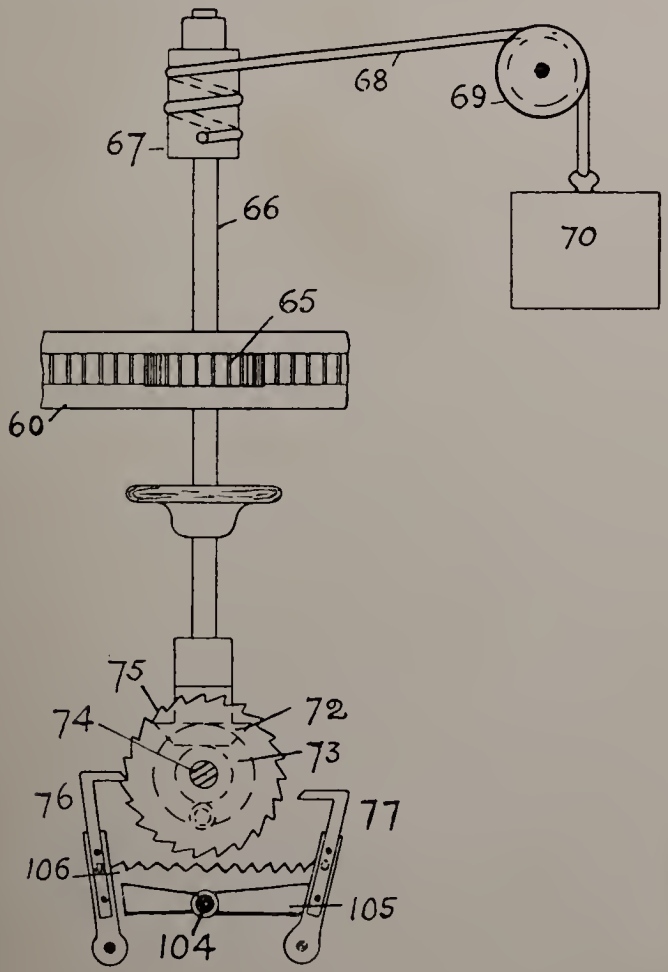

Fig. 268.

Mounted upon the shaft 74 are two cradles 78 and 79. The cradle 78 is loose upon the shaft 74 and therefore

free to oscillate. The cradle 79 is mounted upon the extended sleeve, 80, of cradle 78. Compounded with the sleeve 80 and cradle 78 is the depending arm or lever 64 connected as previously shown with the reversing gear rod 62. Compounded with the cradle 79 is a horizontal arm or lever 81, terminating in an arc of a circle in which two projecting studs, 82 and 83, are fixed. An additional stud 84 in arm 81, supports and serves as a pivot for an additional lever or swivel arm 85, free to oscillate about the stud 84. A bracket 86, is adjustably supported by the stud 87 in lever arm 85. . The bracket 86, is compounded with the builder plate or box 88. Reverting to the cradle 78, it will be observed that the top part of this mechanism forms an arc of a circle, on each side of which are constructed recessed notches 89 and 89^1; two pawl levers, 90 and 90^1 are freely and respectively mounted on studs 91 and 91^1. These studs are fixed in a stationary part of the machine and the pawl levers are alternately and temporarily fixed in and released from the respective recesses 89 and 89^1 by the adjustable screw bolts 92 and 92^1; their function is to prevent any movement of the cradle 78, during the traverse of the builder in either direction.

Further, the cradle 78, is constructed with two projecting arms 93 and 93^1, both slotted, for the reception of two respective link rods 94 and 94^1, whose heads rest freely on the surface of the arms 93 and 93^1.

The cradle 79, is likewise constructed with two projecting arms 95 and 95^1, also slotted for the reception of two short screw bolts 96 and 96^1, which are adjusted

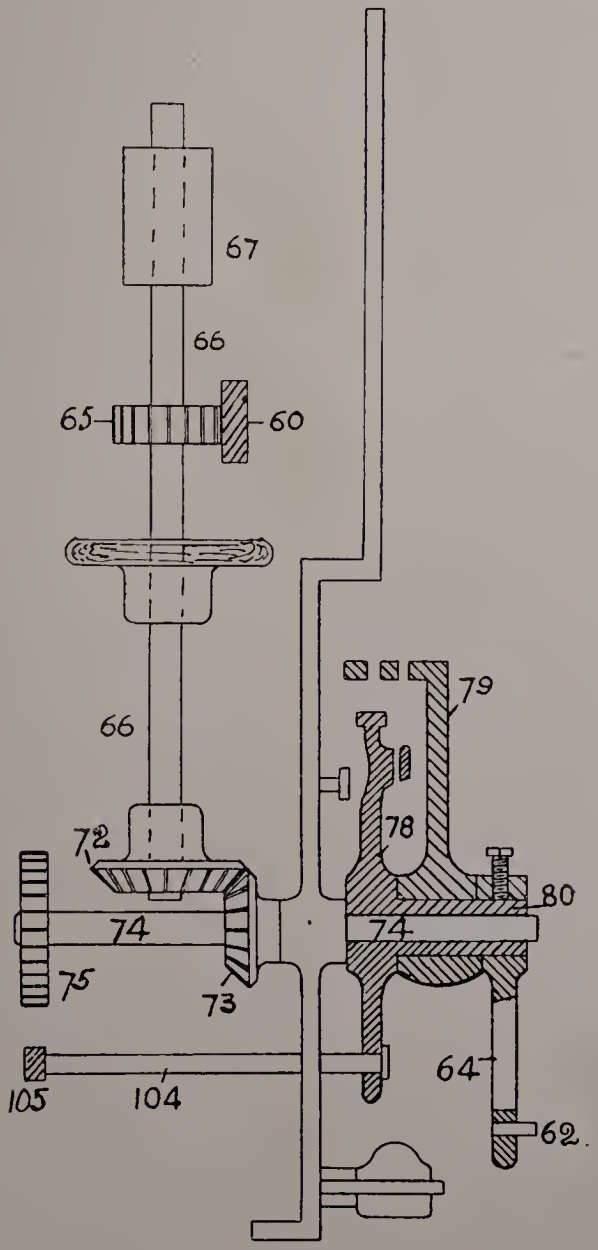

Fig. 269.

to the arms 95 and 95^1 by the lock nuts 97 and 97^1 respectively.

The bolts 96 and 96^1 are combined with the rods 94 by swivel links or loose studs 98 and 98^1 which pass freely through the enlarged base of the bolts 96 and 96^1 and the heads of the rods 94 and 94^1.

A strong spiral spring 99 and 99^1, combines the rods 94 and 94^1 with hooked bolts 100 and 100^1 adjusted by the lock nuts 101 and 101^1 to a balk lever 102, pivoted and free to rotate on a fixed stud 103, carried by a separate detail of the machine frame.

Fixed near the base of the depending arm of cradle 78 is a projecting stud 104 on which is fixed a horizontal arm 105, whose function it is to alternately release the double pawl levers 76 and 77 simultaneously with the rocking of the cradle 78.

61. Action of the Reciprocating Builder Mechanism. Immediately the drawing box is set in motion, the builder box 88, is either travelling up or down. If the builder is ascending it will exert pressure through the details 86, 87 and 85, against the projecting stud 82 in lever arm 81 and thereby oscillate the cradle 79, counterclockwise, about the sleeve 80.

This action continues until the builder reaches the limit of its upward traverse. Meanwhile the projecting arm 95 of cradle 79 has begun to exert an upward pressure upon the lock nuts 97, the resultant effect of which is to raise, in sympathy bolt 96, swivel link 98, rod 94, spiral spring 99, hooked bolt 100 and the right arm of lever 102.

Conversely the left arm of lever 102 is depressed together with all the duplicate details 95^1 to 100^1 inclusive. The enlarged top of rod 94^1 simultaneously exerts a downward pressure on the projecting arm 93^1 of cradle *78* by which means the cradle 78 is also oscillated counterclockwise.

The oscillation of the cradle 78 operates, through its depending arm the horizontal bar 105, a distance sufficient to exert pressure on the pawl lever 76 and remove it from contact with the ratchet wheel 75 on shaft 74. During the momentary interval of the detachment of one pawl lever and the automatic insertion of its duplicate 77, the heavy weight 70 exercises its potential energy to rotate the vertical shaft 66, the rack pinion 65, the rack 60 and belt holder with belt 32, the requisite lateral distance along the cones.

Simultaneously the depending arm 64 from sleeve 80 and cradle 78 moves the rod 62, a sufficient lateral distance to change the bevel gears 43, 44 and 45 and reverse the direction of motion in shaft 46 and the builder box 88.

The downward movement of the lever arm 95 continues until the depending stud 92^1 presses the external arm of pawl lever 90^1 a sufficient distance to release its opposite end from contact with the notched recess.

Meanwhile the pawl lever 90, drops into the notched recess 89 of cradle 78 by which means the reversing gears are retained in their new position until the builder box has traversed to the bottom, when the above sequence of operations are totally reversed through the lever arm 85 striking against the stud 83 at the bottom of its traverse.

For Calculations on Lifter Changes see Chapter XLV.

CHAPTER XLII.

THE DIFFERENTIAL MECHANISMS.

62. *Fundamental data governing epicyclic wheels.* 63. *Epicyclic train of three wheels.* 64. *Laws governing epicyclic and oscillating toothed wheels.* 65. *Various types of differential mechanisms.* 66. *Holdsworth's Differential Motion.* 67. *Oscillating double bevel on an inclined axis.* 68. *Eccentric and double annular spur wheels.* 69. *Howard and Bullough's Differential Motion.* 70. *Action of the Mechanism.*

THE required differential speeds of the bobbin analysed on page 662 can only be correctly attained by a combination of mechanism which produces a resultant and corresponding differential and positive rotary motion to the bobbin. Such a compound mechanism is necessarily obtained from two independent sources, one of which is constant and the other a gradually varying rotary motion. The fundamental basis of the differential mechanism is defined in mechanics as the differential train. In the textile trades, this complex mechanism is termed a differential motion.

62. Fundamental data governing epicyclic wheels.

A brief study of these fundamental data will simplify matters and avoid repeated explanations later.

A wheel may be defined as epicyclic when it is constructed to move round the circumference of a second or other wheel.

An epicyclic train of wheels consists of one or more wheels attached to a lever arm or other simple equivalent and being free to rotate round a wheel having a fixed centre.

The axes of the epicyclic wheels are not fixed in space but rotate in their orbit.

The lever arm which carries the epicyclic wheel or wheels is pivoted and rotates on the same centre as the fixed central wheel.

The rotation of the lever arm imparts an additional and independent motion to the wheel or wheels which it carries.

Fig. 270 is a diagram to illustrate simply the fundaments of the epicyclic train.

A is a stationary spur wheel mounted on a fixed stud B ; C is a lever arm pivoted on stud B ; D is a stud fixed near the free end of lever C and E is a spur wheel free to rotate on the stud D ; the teeth of wheel E intermesh with those of wheel A.

EXAMPLE 1. Assume the lever arm is rotated once, find the number of revolutions which the free wheel E makes, when wheels A and E each contain 40 teeth.

Then the spur wheel E is subjected to two forces.

1. It is rotated *once* round the stud B through its connection with the lever arm C.

2. It is rotated *once* on its own axis D because its teeth are intermeshed with those of wheel A.

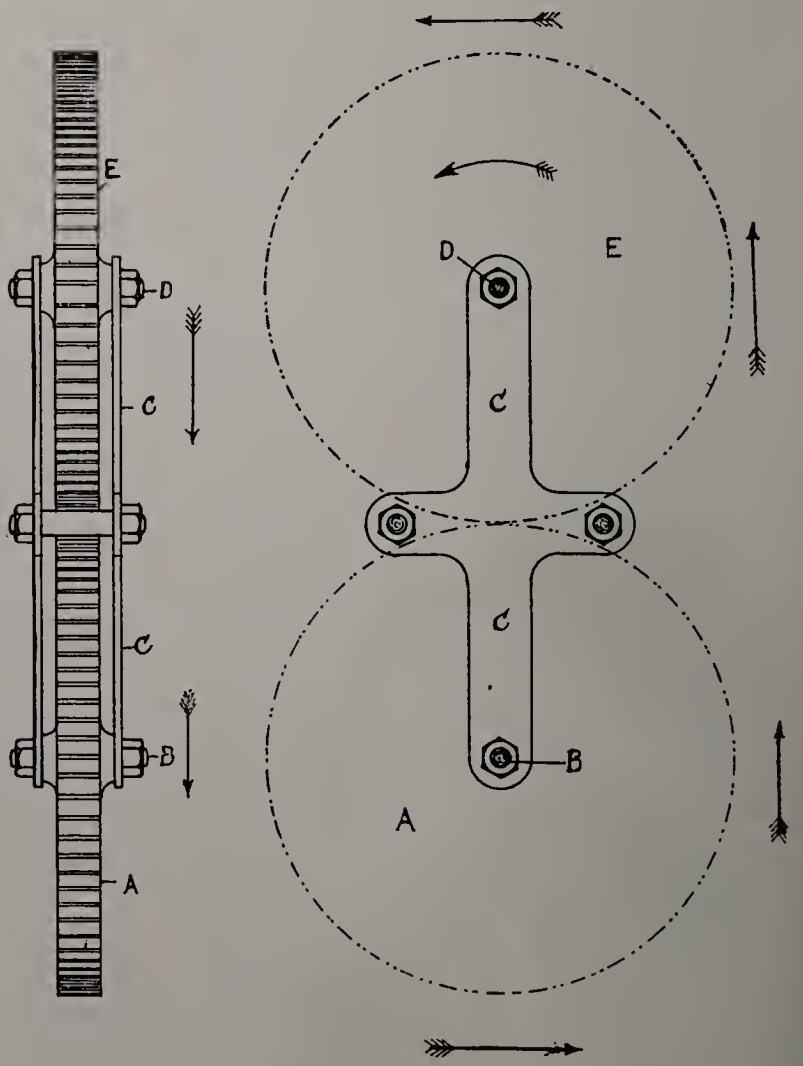

Fig. 270.

It therefore follows that for *each* revolution of the lever arm C, the spur wheel E makes *two* revolutions. From this basis the following formula is deduced.

Formula I. For epicyclic train of *two* wheels.

$$\text{Revs. of Epicyclic wheel E} = \left(\frac{\text{No. of teeth in fixed wh. A}}{\text{No. of teeth in epicyclic wh. E}} + 1\right) \text{Revs. of Arm C.}$$

$$\text{Then revs. of E per rev. of lever arm C} = \left(\frac{40}{40} + 1\right) 1 = 2$$

EXAMPLE 2. Assume the fixed wheel A contains 45 teeth, the epicyclic wheel E 30 teeth. Ascertain the number of revolutions of wheel E for each revolution of the lever arm C.

Then by formula I—

$$\text{Revs. of E} = \left(\frac{45}{30} + 1\right) 1 = 2\tfrac{1}{2}$$

EXAMPLE 3. The fixed wheel A contains 30 teeth, the epicyclic wheel E 40 teeth and the arm C makes 10 revolutions. Find the number of revolutions of wheel E.

Then by formula I—

$$\text{Revs. of E} = \left(\frac{30}{40} + 1\right) 10 = 17\tfrac{1}{2}$$

63. Epicyclic train of three wheels. Fig. 271 shows an epicyclic train of three wheels. A is fixed on a stationary shaft B. C is a lever arm pivoted on shaft B; D is a stud formed on the end of lever arm C on which the wheel F is supported and free to rotate. E is compounded with the socket G mounted and free to rotate on the fixed shaft B. H is a bevel wheel also compounded with the socket G, and serves to distribute the velocity ratio generated in wheel E. The teeth of wheel A intermesh with those of F and those of F with the teeth of E. Each wheel contains 30 teeth.

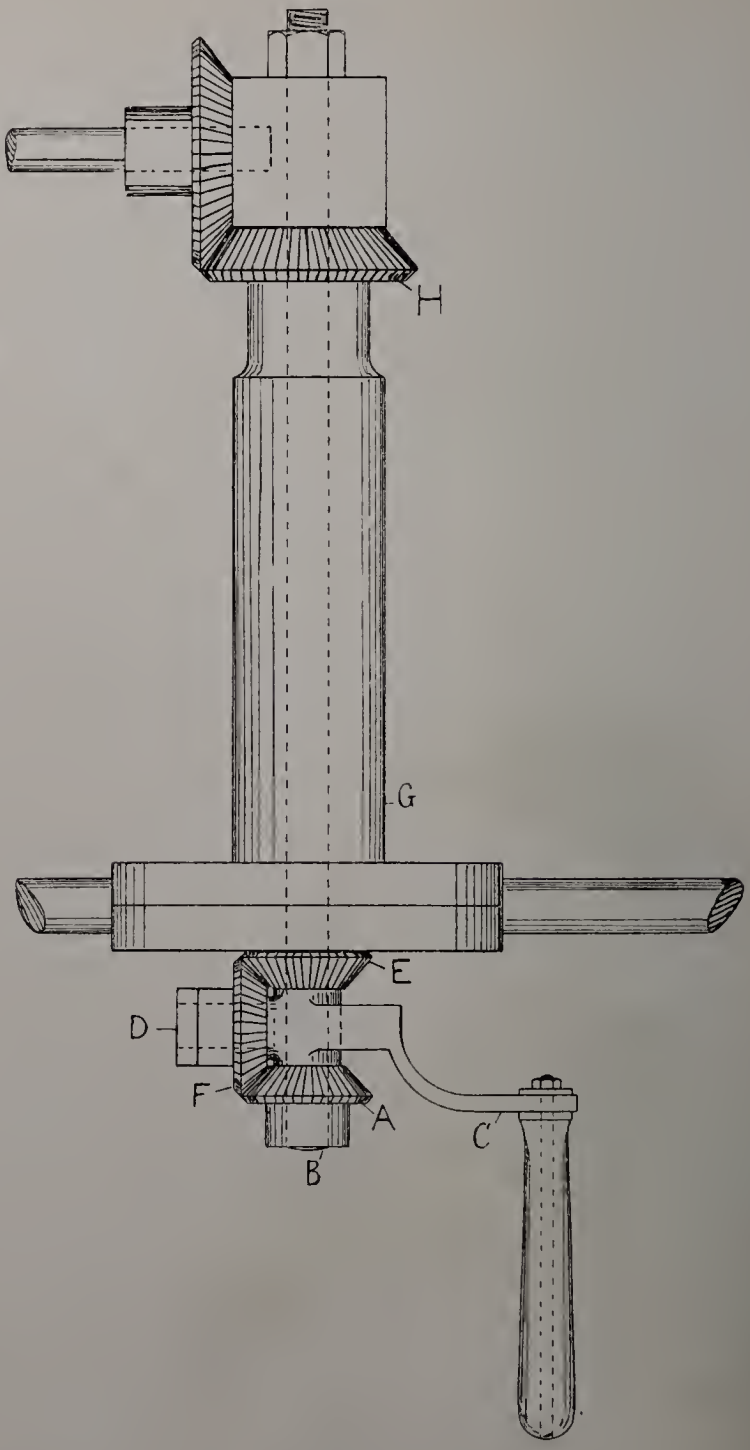

Fig. 271.

EXAMPLE 4. Find the revolutions of bevel wheel E for each revolution of the lever arm C in Fig. 271.

It will be evident that for each revolution of the arm C, the bevel wheel F even if stationary on its stud D, would rotate the bevel wheel E and socket G once, for each revolution of the arm C. But since the bevel wheel F is free to rotate on its own axis and since its teeth are intermeshed with those of the fixed wheel A, it therefore rotates once on its own axis which rotation it transmits to the socket bevel E and thereby produces with its former effort a resultant effect of *two* revolutions for each complete revolution of the lever arm C.

N.B.—Further, if the shaft B is rotated, it will then, through bevels A and F rotate the bevel wheel E and socket G in the opposite direction, independently of other factors.

It will thus be seen that the bevel and socket wheel can be rotated from two independent sources. (1) The shaft B and fixed bevel wheel A which is simple and direct as in an ordinary train and (2) The arm C and wheel F which is epicyclic and may vary at will.

Then it a definite and uniform rotation is imparted through shaft B and wheel A to the bevel E, its speed may be increased or decreased at will by the independent rotation of the lever arm C.

EXAMPLE 5. Assume the arm C, Fig. 271, makes 10 revolutions, that wheel A contains 30 teeth and is stationary, wheel F 30 and wheel E 45 teeth. Find the revolutions of wheel E.

Then by formula II which is an adaptation of formula I.

$$\text{Revs. of E} = \left(\frac{\text{Teeth in fixed wheel A}}{\text{Teeth in free wheel F}}\right) \text{Revs. of C} + \left(\frac{\text{Teeth in F}}{\text{Teeth in E}}\right) \text{Revs. of C.}$$

$$\text{Revs. of E} = \left(\frac{30}{30} \times 10\right) + \left(\frac{30}{45} \times 10\right) = 16\tfrac{2}{3}$$

EXAMPLE 6. Assume shaft B with wheel A makes 10 revolutions counter clockwise and the arm C makes 10 revolutions clockwise. A 30 teeth ; F 30 teeth ; and E 45 teeth. Find the speed of E for the differential.

Solution—

Then since the shaft B rotates counter clockwise it will rotate through A & F the wheel E clockwise, the same direction as the arm C does. Consequently the speed of E will be equivalent to the sum of the two independent forces, thus :—

$$\text{Revs. of E through wheel A} = \frac{\text{Revs. of B} \times \text{teeth in A}}{\text{teeth in E}} = \frac{10 \times 30}{45} = 6\tfrac{2}{3}$$

$$\text{Revs. through arm C} = \left(\frac{30}{30} \times 10\right) + \left(\frac{30}{45} \times 10\right) = 16\tfrac{2}{3}$$

$$\text{Resultant revs. of E through A and C} = 23\tfrac{1}{3}$$

EXAMPLE 7. Assume the shaft B, bevel wheel A and arm C (Fig. 271) all rotate clockwise. Calculate the direction of rotation and velocity of E for 10 revolutions of arms C and shaft B. A and F contain 30 teeth each and wheel E, 45 teeth.

Then the effect of the positive rotation of A on E will be minus or counter clockwise and that of arm C on E will be clockwise.

$$\text{Revs. of E, due to Revs. of shaft A} = \frac{10 \times 30}{45} = -6\tfrac{2}{3}$$

$$\text{Revs. of E, due to Revs. of Arms C} = \left(\frac{30}{30} \times 10\right) + \left(\frac{30}{45} \times 10\right) = +16\tfrac{2}{3}$$

$$\text{Revs. of E through} \quad -A + C = 16\tfrac{2}{3} - 6\tfrac{2}{3} = 10$$

64. Laws governing epicyclic and oscillating toothed wheels.

In several of the differential mechanisms to be described the wheels comprising the epicyclic train are neither all spur nor simple bevels, and further they are free to rotate and oscillate on an eccentric axis. Some of these wheels oscillate into a fixed and others into a free wheel. For these reasons a few simple laws which govern the rotation of these wheels and which will assist in the elucidation of subsequent problems are given herewith.

HYPOTHESIS. Given a double wheel X Z (Fig. 272) mounted and free to rotate on an oblique axis or eccentric Y. The eccentric Y forms part of a large wheel A which is free to rotate on a shaft B. C is a wheel fixed to the shaft B, and E is a wheel loose on the shaft B. The teeth of X intermesh with those of the *fixed* wheel C and the teeth of Z intermesh with those of the loose wheel E. Assume :—

Case 1. The teeth of wheel X are in excess of wheel C.
,, 2. ,, ,, X are fewer than in wheel C.
,, 3. ,, ,, Z are in excess of wheel E.
,, 4. ,, ,, Z are fewer than in wheel E.

LAW I (Case 1). Then for each revolution of the eccentric axis Y all the teeth of the wheel X are oscillated into those of the fixed wheel C.

Then, too, the direction of rotation of the oscillating wheel X will be positive, i.e. in the same direction as its operating axis Y. The value of the amount of rotation will be equivalent to the excess teeth which the free wheel X contains above those of the fixed wheel C and may be expressed thus :—

$$1 \text{ Rev. of } Y = \frac{\text{Teeth in } X - \text{teeth in } C.}{\text{Teeth in } X.} = + \text{value.}$$

Law II (Case 2). Then for each revolution of the eccentric axis B, the direction of rotation of A will be

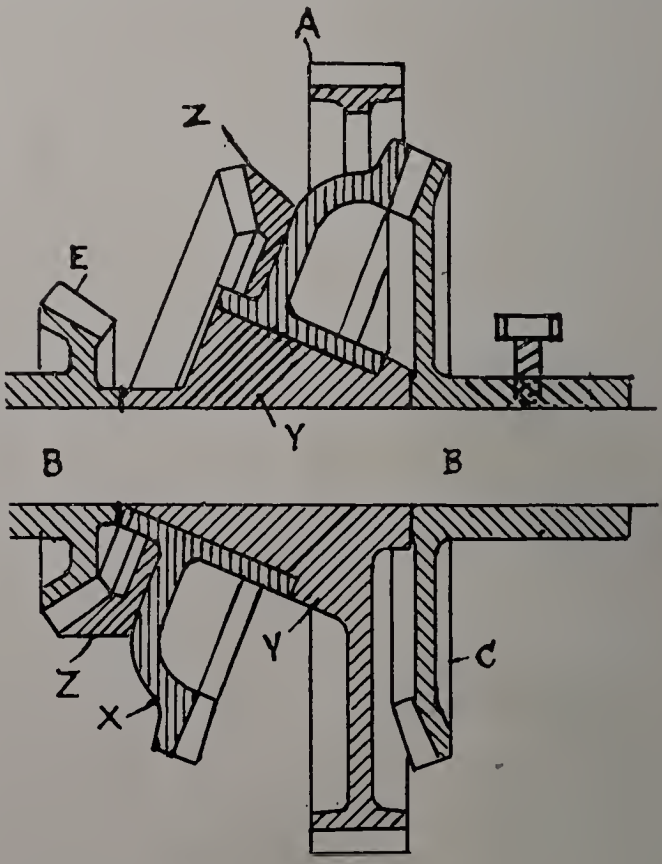

Fig. 272.

negative, i.e. it will lag behind, a rotary distance, equivalent to the number of teeth which it contains less than the wheel C, expressed thus :—

$$1 \text{ Rev. of } Y = \frac{\text{Teeth in } C - \text{teeth in } X}{\text{Teeth in } X} = - \text{value.}$$

Law III (Case 3). Then for each revolution of the eccentric axis Y all the teeth of Z oscillate into those of E, which being fewer than those of Z, the wheel E must therefore be reversed a number of teeth equal to the difference between E and Z.

Its value may be expressed as follows :—

$$1 \text{ Rev. of Y} = \frac{\text{Teeth in Z} - \text{teeth in E}}{\text{Teeth in E}} = -\text{value}$$

N.B.—The wheel E being loose cannot rotate the wheel Z though also loose on its own axis, but is temporarily restrained because its composite wheel X is in gear with the fixed wheel C.

Law IV (Case 4). Then since the oscillating wheel Z contains fewer teeth than the loose wheel E, the latter advances a number of teeth equivalent to the difference between E and Z which is expressed as follows :—

$$1 \text{ Rev. of Y} = \frac{\text{Teeth in E} - \text{teeth in Z}}{\text{Teeth in E}} = +\text{value}$$

Summarised for reference.

Larger wheel – Smaller wheel

Law 1. $\dfrac{\text{Teeth in X} - \text{teeth in fixed wheel C}}{\text{teeth in X}} = +\text{value}$

,, 2. $\dfrac{\text{Teeth in C} - \text{teeth in X}}{\text{teeth in X}} = -\text{value}$

,, 3. $\dfrac{\text{Teeth in Z} - \text{teeth in E}}{\text{teeth in E}} = -\text{value}$

,, 4. $\dfrac{\text{Teeth in E} - \text{teeth in Z}}{\text{teeth in E}} = +\text{value}$

65. Various Types of Differential Mechanisms.

The necessity for and object of a differential mechanism have been already explained. At this juncture it will be more explicit if each mechanism is detached from its external and contiguous complexities and an explanation given of the construction and action of each selected type showing how each mechanism produces the requisite variable velocity in the socket wheel E and bobbin wheel H with which it is compounded and through which the variable velocity is transmitted to the bobbin.

Frequent references to Figs. 271, 272 and 273 and paragraphs 62, 63 and 64 will be necessary when considering the following mechanisms. Also as far as possible the several essential parts of the different diagrams representing similar parts and functions are indicated by similar letters and numerals.

66. Holdsworth's Differential Motion. The ordinary type of differential mechanism first successfully employed and still extensively used in the textile trade is illustrated at Figs. 265 and 273. The former diagram has already been considered but a reference to the same will be useful, since it gives the location of the differential mechanism in relation to other important contiguous parts.

In these illustrations the bevel wheel C is fastened to the shaft B. The wheel A denominated the crown wheel is loose on the shaft B. Wheel A supports and carries at right angles to itself two bevel wheels F and F^1 each of which is free to rotate on its own axis. The teeth of

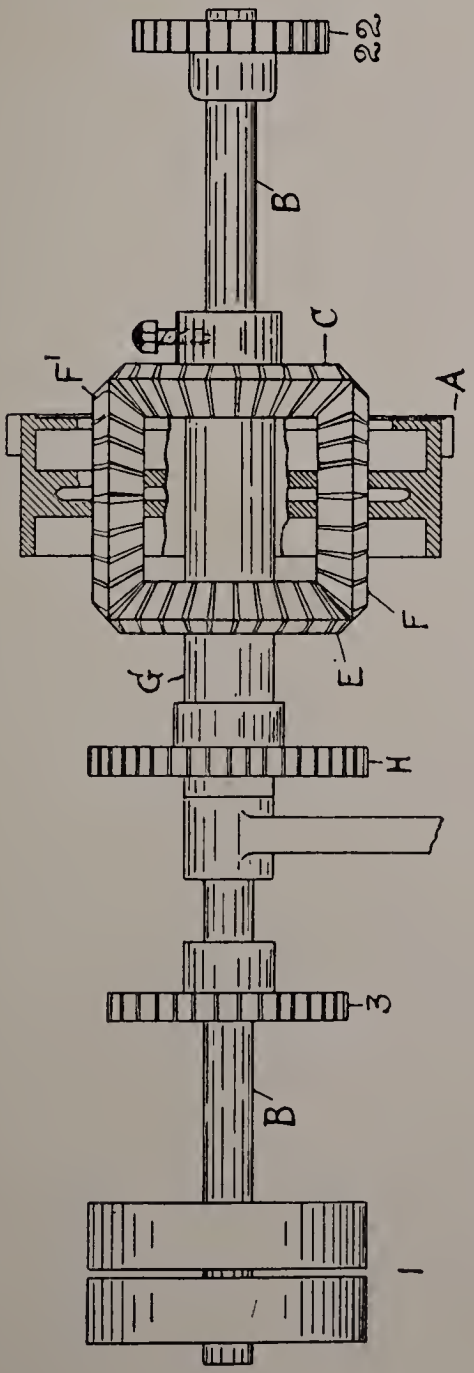

Fig. 273.

bevels F and F^1 intermesh with the fixed wheel C and a bevel wheel loose on the frame shaft B. Compounded with the sleeve of wheel C is the bobbin wheel H both of which therefore rotate in sympathy. The crown wheel A replaces the arm C in Figs. 270 and 271 and the remaining parts in all the illustrations correspond to like letters.

The wheel E and bobbin wheel H can therefore be rotated independently (1) from the fixed driving wheel C and (2) from the crown wheel A.

The number of teeth in the wheels C, F, F^1 and E are equal. The bevel F^1, is only added as a counterpoise to F and does not in any way affect the calculation.

Note :—The bevel wheel C will obviously produce rotation in the bevel E in the *opposite* direction to itself, whereas the rotation of the crown wheel A will carry through F, the bevel E in the *same* direction as itself.

In worsted cone drawing the bobbin usually leads, therefore the crown wheel A must give an added velocity to the bobbin wheel H over that of the spindle wheel 3 both on the same shaft B. In order to give this added velocity, the crown wheel must necessarily rotate in the opposite direction to the frame shaft B on which it is carried. The friction thus generated is always a serious objection.

EXAMPLE 1. Calculate the number of revolutions of E Fig. 273. (a) For one revolution of bevel C with crown wheel stationary. (b) For one revolution of crown wheel A, with frame shaft B and bevel wheel C stationary.

SOLUTION.

(a) Assume the shaft B and wheel C rotate in a counter-clockwise direction, which for convenience is denominated negative and by the minus sign.

Then since the three bevels C, F and E are equal and the rotation of C is minus, the rotation of E will be plus—

$\therefore$ 1 Rev. of $-$ C $=$ 1 Rev. of E.

SOLUTION.—

(b) Assume the crown wheel A rotates in a clockwise or plus direction. Then the bevel C being stationary, the wheel F will rotate *once* on its own axis, through its gear with C and a second time on account of its connection with crown wheel A both of which revolutions are transmitted to the socket wheel E in the same direction of rotation as the crown wheel which is positive.

$\therefore$ 1 Rev. of crown wheel A$=$2 Revs. of socket wheel E.

From this data, the revolutions of the bobbin for any required diameters can be readily obtained.

EXAMPLE 2. Assume the speed of the spindles is 260 and the required speed of the bobbin is 320 revolutions per unit of time. Calculate the number of revolutions which the crown wheel must make.

Then	Revs. of Bobbin	--	Revs. of Spindles	=	Excess speed of bobbin.
	320	–	260	=	60 revs.

$\therefore$ Revs. of Crown Wheel A $= \frac{60}{2} =$ 30 revs.

67. Oscillating double bevel on an inclined axis.

Fig. 274 shows a longitudinal section through Combe, Barbour's, Ltd., differential mechanism as applied to the roving frame. Its chief feature consists of a double bevel which oscillates on an inclined axis forming part of the crown wheel. The details of construction are as follows :—B is the frame or pulley shaft, C a wheel fixed on the shaft B. A is the crown wheel combined with a sleeve Y loose on the shaft B. The periphery of the sleeve Y is constructed and set obliquely to the frame shaft B. A double bevel X and Z are free to rotate on the periphery of the sleeve Y. The teeth of X are in gear with those of the fixed bevel C and those of Z with the teeth of the socket bevel E which is loose on the shaft B. A wheel H, denominated the bobbin wheel is compounded with an extension of the sleeve of socket E.

A constant rotary motion may be transmitted to the socket bevel E by the fixed bevel C, through the skew bevels X and Z.

The rotation of the crown wheel A will oscillate the skew bevels X and Z and transmit to E an increase or decrease of speed according to its required direction of rotation.

The number of teeth in the above wheels which affect the calculation are C with 56, X with 60, Z with 45, and E with 30 teeth.

EXAMPLE I. Find the value of the train of wheels, independently of the crown wheel, for one revolution of the frame shaft B.

$$\text{Then value of ordinary train} = \frac{\text{C} \times \text{Z}}{\text{X} \times \text{E}} = \frac{56 \times 45}{60 \times 30} = 1{\cdot}4$$

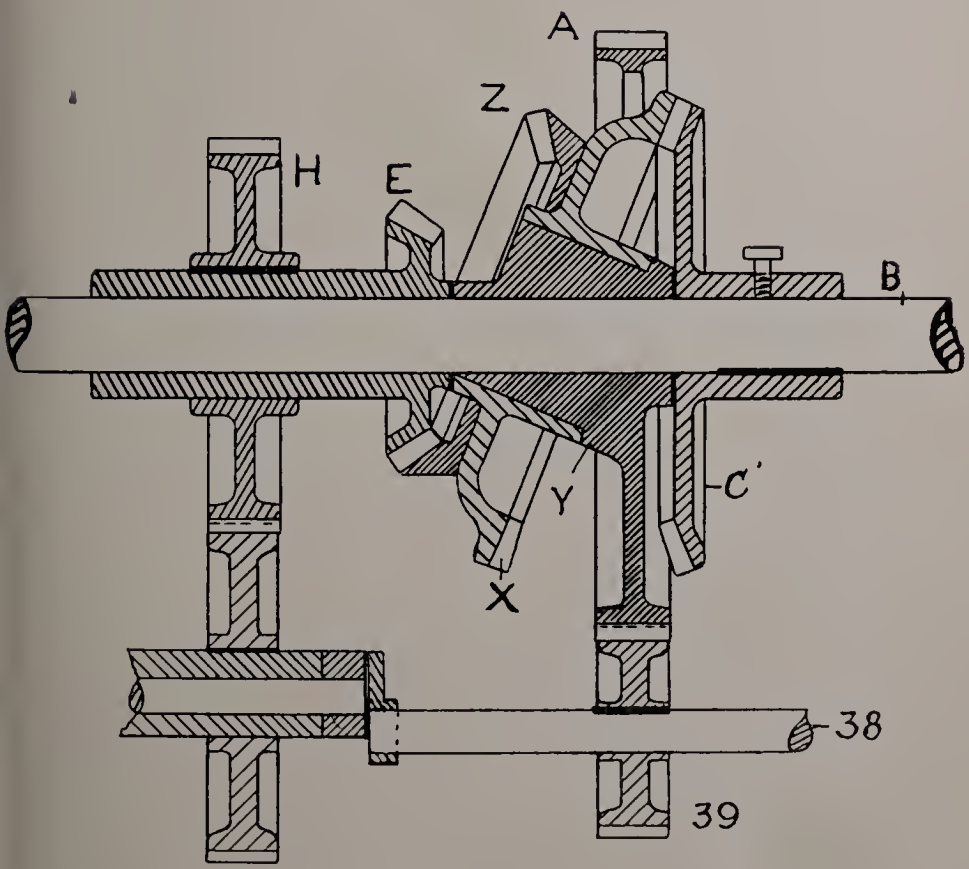

Fig. 274.

EXAMPLE 2. Find the numerical value of the crown wheel for one revolution, independently of the rotation of the frame shaft B.

The practical solution of this problem is simple, but the proof of same, theoretically, is somewhat complex.

Practical Solution. Rotate the crown wheel A, until it together with the socket wheel E have each made a complete number of revolutions, e.g. five revolutions of the crown wheel produce two revolutions of the socket wheel.

Then 1 Rev. of the crown wheel $= \frac{2}{5} =$ 0·4 socket wheel.

If the revolution of the crown wheel is in the same direction as the frame shaft then its influence is minus and conversely, plus.

Theoretical Solution. Assume the direction of the crown wheel is positive like the frame shaft B and bevel C, the value of which is +1·4 per revolution. Then though the sleeve Y cannot directly rotate the bevels X and Z, it does however, with each complete revolution of the crown wheel, oscillate these two bevels at right angles to the plane of rotation, i.e. parallel to the frame shaft.

I. For each revolution of the crown wheel, *all* the 60 teeth of bevel X will oscillate into those of the fixed wheel C containing 56 teeth and 4 teeth beyond in the same direction as the crown wheel ; therefore 4 teeth of

$$X = \frac{4}{60} = +\frac{1}{15} \text{rev. wheel X.}$$

But since the bevel X is compounded with the bevel Z which contains 45 teeth and drives the socket E with 30 teeth, the resultant effect on E may be expressed thus.—

Revs. of E due to the oscillation of X into C =

$$E = +\left(\frac{4}{60} \times \frac{45}{30} \right) = +\frac{1}{10} \text{ revolution}$$

(X, Z, E)

II. For each revolution of the crown wheel and sleeve Y, all the 45 teeth of the bevel Z oscillate into the socket bevel wheel E containing 30 teeth which being loose, is rotated 15 teeth (to complete the 45) in a minus direction, i.e. opposite to the rotation of the crown wheel. This may be expressed as follows :—

$$\text{Revs. of E due to the oscillation of Z into E} = -\left(\frac{15}{30}\right) = -\frac{1}{2}$$

III. The value of one revolution of the crown wheel in the same direction as the frame shaft=

Result of oscillations of (X into C)+(Z into E)

$$= \frac{1}{10} - \frac{1}{2} = -0{\cdot}4 \text{ rev.}$$

From the foregoing reasoning it will be evident that the speed of the socket bevel E and bobbin wheel H is equivalent to the product of the revolutions of the shaft B and the value of the train (1·4), minus the product of the revolutions of the crown wheel A and its numerical value per revolution (0·4) or expressed thus—

(Revs. of B) (1·4) – (Revs. of A) (0·4)=Revs. of Socket wheel E when the flyer leads and from formula, any required speed of bobbin can be easily obtained.

Summarising the foregoing it will be evident that if wheels X and C or Z and E each contained the same

number of teeth, no rotation whatever could take place, through the oscillation of bevels X and Z.

If however the wheel X contained 4 teeth less than the wheel C, it would have lagged behind 4 teeth, i.e.

$$\frac{4}{52} = -\frac{1}{13} \text{ Rev.}$$

Also if the wheel Z contained only 20 teeth then the wheel E would rotate in a plus direction equal to—

$$+\frac{10}{30} = \frac{1}{3} \text{ rev.}$$ See also page 689.

65. Eccentric and double annular spur wheels.

The chief characteristic feature of this mechanism is an eccentric on which is mounted a double annular wheel provided with spur teeth on the periphery of one and internally on the other.

The eccentric replaces the arm A, Fig. 270, and rotates in the same direction as the former shaft.

The teeth in all the wheels are of the spur type. In the oscillating wheels they are sufficiently numerous as to be always in gear, which reduces the possibility of breakages to a minimum. The whole of the mechanism is enclosed in a steel case and balanced both statically and dynamically. The proprietors and manufacturers of this design are Messrs. James Mackie & Sons, Ltd., Belfast. The original invention was patented by Wm. Gibson, Belfast.

Fig. 275 is a longitudinal section through the essential details of the mechanism.

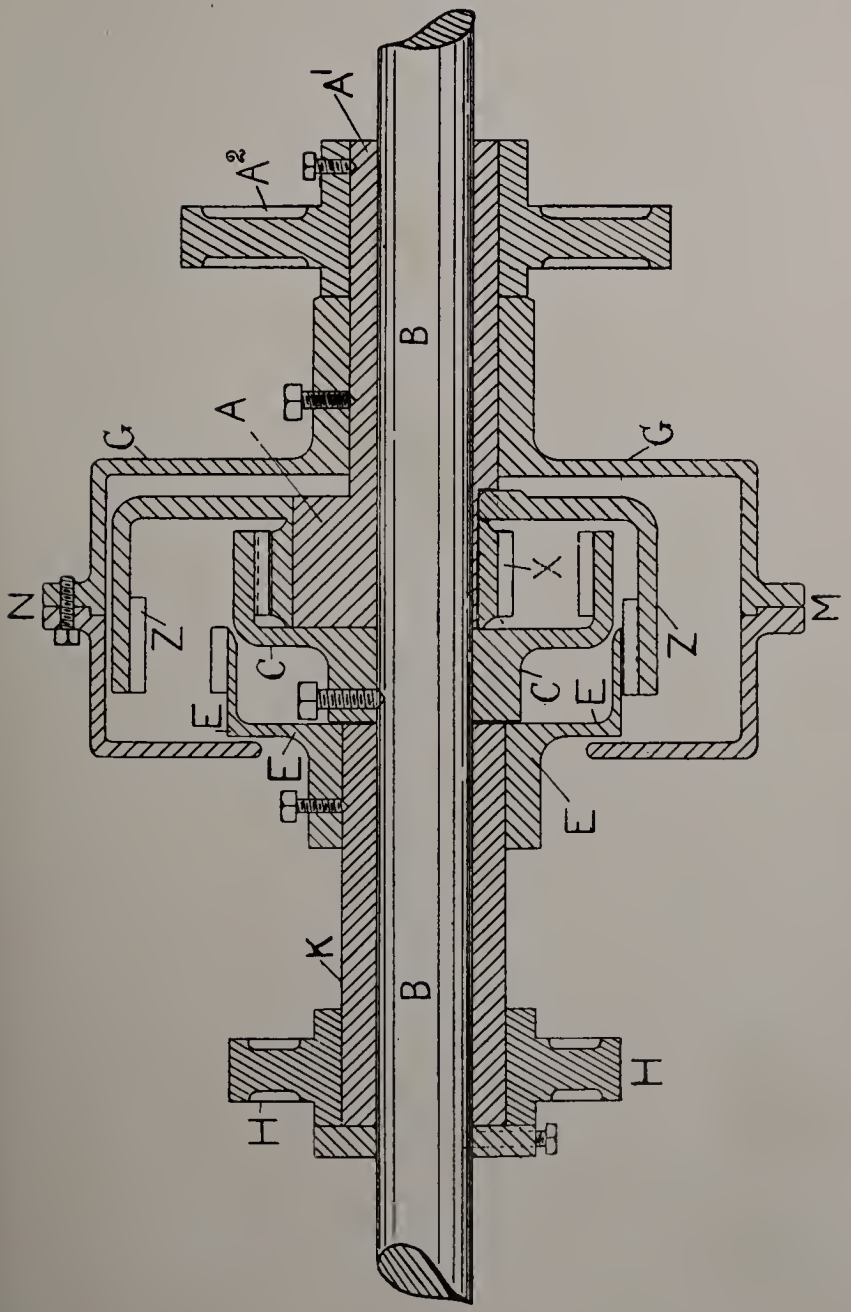

Fig 275.

Fig. 276 is a transverse section, through M, N, the centre of Fig. 275, looking to the right.

Fig. 277 is a transverse section through M, N, the centre of Fig. 275, looking to the left.

The letters in each diagram refer to corresponding details. B is the frame shaft. A is an eccentric forming

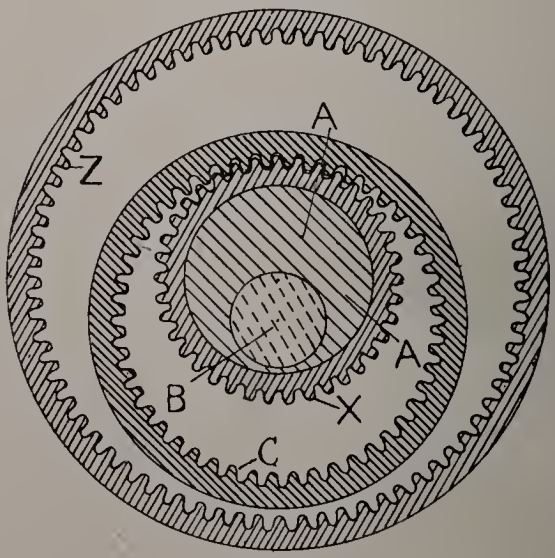

Fig. 276.

part of a sleeve A^1 free to rotate on the shaft B. A^2 is a spur pinion compounded with the sleeve A^1 and eccentric A. A^2 receives a varying motion from the cones in the usual way and may be conveniently referred to as the "crown wheel." C is an annular spur wheel set screwed to the frame shaft B. X and Z constitute a compounded double wheel mounted and free to oscillate on the eccentric A.

E is a spur wheel compounded with the sleeve or socket K with which also is compounded the bobbin wheel H, all free to rotate on the frame shaft A. The teeth on the periphery of oscillating wheel X intermesh with the teeth of the fixed annular wheel C.

The teeth of the oscillating annular wheel Z intermesh with the spur teeth of the socket wheel E.

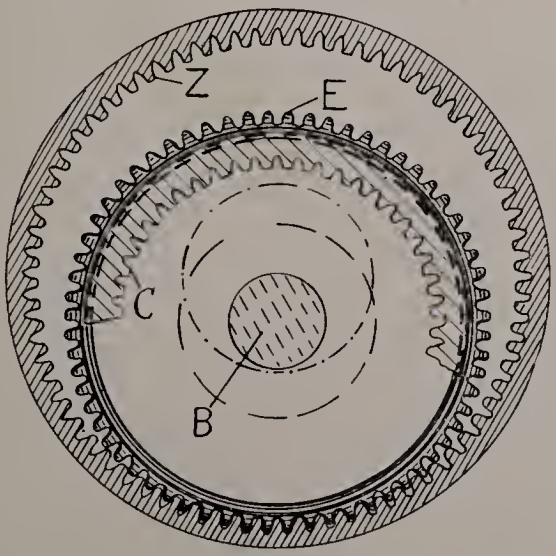

Fig. 277.

The constant motion to the spindles is conveyed by an ordinary train of wheels as is usual, from the frame B. The differential speed of the bobbin wheel H is obtained from the combination of the constant speed of the frame shaft B and wheel C, and the varying speed of the crown wheel A^2 compounded with the eccentric A, each operating interdependently through the spur wheels X Z and C E. The number of teeth in the respective wheels of the train is as follows :—

Oscillating wheel	X = 36 teeth	Compounded.
,, ,,	Z = 72 ,,	
Frame shaft wheel	C = 48 ,,	
Socket wheel	E = 60 ,,	

EXAMPLE 1. Find the value of the train independently of the crown wheel A^2.

SOLUTION. Then the frame shaft wheel C drives the eccentric wheel X, and its component wheel Z drives the socket wheel E; therefore the drivers C and Z, if increased, would produce a greater value of train and conversely the driven wheels X and E, would for a like reason tend to produce a lesser value of train thus :—

Value of train =

$$\frac{\text{More}}{\text{Less}} = \frac{C \times Z}{X \times E} = \frac{48 \times 72}{36 \times 60} = 1{\cdot}6$$

i.e. for each revolution of the frame B, the bobbin wheel H, produces 1·6 revolutions in a positive direction.

EXAMPLE 2. Assume the frame shaft B and fixed wheel C are stationary and the "crown wheel" A^2 with eccentric A makes one revolution in the normal direction of the frame shaft B. Ascertain the purchase train of the differential train.

SOLUTION—(See also page 689).

Then for each rotation of the eccentric A, the spur teeth of the oscillating wheel X are all rolled into those of the annular fixed wheel C.

And since the wheel X contains only 36 teeth and the wheel C 48 teeth, the latter will lag 48 − 36 = 12 teeth = $-\frac{12}{36} = -\frac{1}{3}$ of a revolution behind the eccentric A.

The annular wheel Z with which X is compounded must therefore also lose $\frac{1}{3}$ revolution for each revolution of the eccentric A and crown wheel A^2.

∴ Rotation of socket wheel E due to the first factor or law =

$$-\left(\frac{1}{3} \text{ of } \frac{72}{60}\right) = -\frac{24}{60} = \frac{2}{5} = 0{\cdot}4.$$

Z / E

Further, the rotation of the eccentric A simultaneously oscillates the annular wheel Z until all its teeth have intermeshed with those of the socket wheel E.

Then the rotation of Z will be momentarily restrained or retarded, due to its connection with the fixed wheel C, through the teeth of its composite wheel X intermeshing with those of C. The result of this is that the free wheel E will be rotated or retarded in a minus direction to that of the eccentric a distance equivalent to the number of teeth which it contains less than the oscillating wheel Z with which its teeth intermesh. Since Z contains 72 teeth and wheel E 60, the difference in retardation due to this factor alone would equal 72 − 60 = 12 teeth behind.

∴ Retardation due to factor 2 =

$$-\frac{12}{60} = \frac{1}{5} = 0{\cdot}2$$

To one revolution of eccentric A therefore,

The revolution of socket wheel E	=	0·6
Made up as follows :—due to factor 1		0·4
,, ,, 2		0·2
		0·6

69. Howard and Bullough's Differential Motion.

The mechanism adopted by this firm consists of a very simple train of wheels. Fig. 278 is a plan of the differential details of this mechanism.

Fig. 279 is a perspective view of same, and the same letters in each illustration refer to corresponding details.

B is the frame shaft, A^2 a spur wheel combined with sleeve A^1 and bevel wheel A all loose on the shaft B.

The spur wheel A^2 receives its rotary and varying motion from the cones. The bevel wheel A gears into and drives a bevel X fast on the cross shaft C.

The shaft C passes freely through the frame shaft B and carries at its opposite end a fixed bevel wheel Z, the teeth of which intermesh with those of a socket bevel wheel E the boss of which is projected and compounded with the spur or bobbin wheel H.

S is a spur wheel, fast to the frame shaft and from S the uniform motion is transmitted to the spindles. The direction of rotation of all the moving parts is indicated by the arrows.

Fig. 280 is a perspective view of the cross shaft C and fixed bevels X and Z.

70. Action of the mechanism.

The rotation of the socket or bobbin wheel H is subject to two influences. *First.* The continuous rotation of the frame shaft B together with the cross shaft C. The bevels X and Z combine to rotate the socket wheel E in the same direction as the frame shaft B.

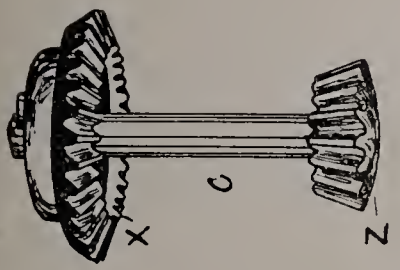

Fig. 280.

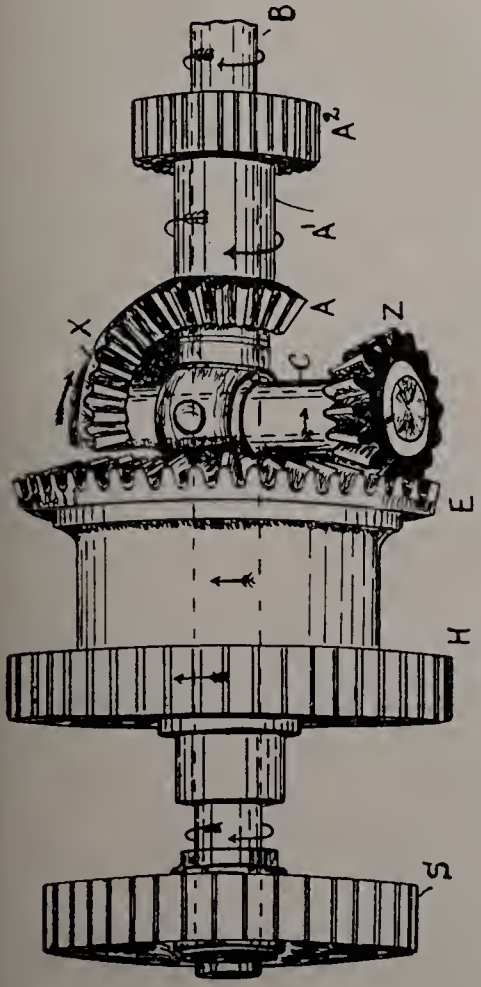

Fig. 279.

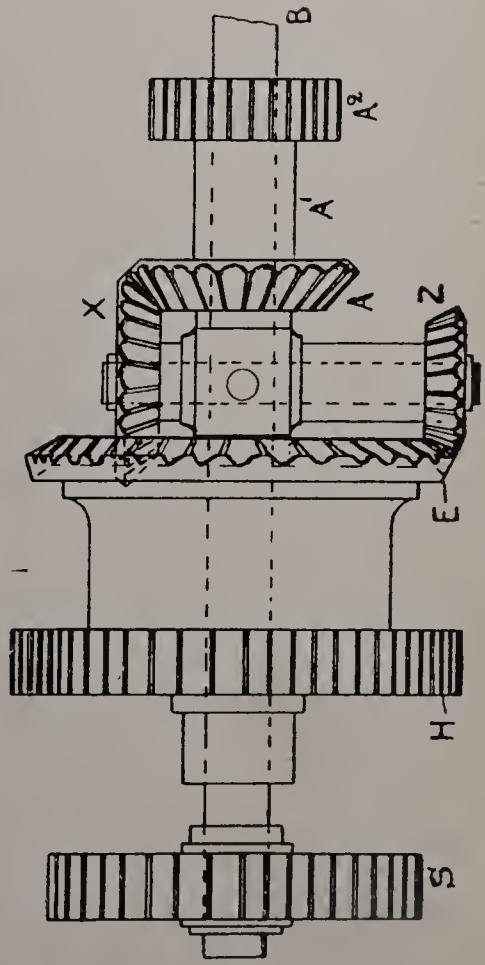

Fig. 278

Second. The velocity rotation of the bobbin wheel H modified by the speed of the cone driven wheel A^2 operating through the train already detailed, e.g.

I. If the wheels A and X are disengaged and the frame shaft B rotates then the cross shaft C will rotate the socket bevel E and bobbin wheel H in the same direction and at the same velocity as the frame shaft.

II. If the frame shaft B is temporarily suspende d the wheels A and X are engaged as shown and the cone, driven wheel A^2 is rotated once in the same direction as the frame shaft, then the following wheels will necessarily be rotated in directions as indicated by the arrows in the diagram and at a rate according to the purchase value of the train of wheels and speed of the wheel A^2.

III. If all the wheels are engaged as in the diagram, the shaft B rotated *once* in its normal direction as indicated by the arrow and the bevel A is stationary, then the shaft C will rotate in sympathy and direction as the shaft B and thus tend to promote the same direction of rotation to the socket bevel E and the bobbin wheel H. But since the teeth of the bevel wheel X on shaft C are intermeshed with those of the wheel A which is temporarily suspended, then the bevels X and Z with shaft C will be influenced to rotate axially counter clockwise, i.e. directly opposite to the direction indicated by the arrows, and their normal paths of rotation.

The consequent and net result of this interference is to retard the velocity rate of the socket bevel E, for each revolution of the frame shaft B, an amount equivalent

in value to the differential train of wheels detailed above and number of teeth as below.

EXAMPLE I. Given the number of teeth in the above train of wheels as follows, A 18; X 30; Z 16; E 48; H 50 and S 40, find (a) the numerical value of the differential train for *one* revolution of the wheel A and with the frame shaft B stationary; (b) the numerical value for one revolution of the frame shaft B when the cone wheel A^2 and bevel wheel A are stationary.

SOLUTION (a)—

Revs. of socket bevel E for 1 Rev. of cone wheel A^2 and bevel A with frame shaft B stationary.

$$= \frac{\text{More}}{\text{Less}} = \frac{\text{Teeth in A}}{\text{Teeth in X}} \times \frac{\text{Teeth in Z}}{\text{Teeth in E}} = \frac{18}{30} \times \frac{16}{48} = \frac{1}{5} = 0{\cdot}2$$

SOLUTION (b). See paragraph III previously, then Revs of socket bevel E for 1 Rev. of frame B with cone wheel A^2 and bevel A stationary.

=Revs. of frame shaft B. – Value of differential train.

$$= 1 - \frac{1}{5} = \frac{4}{5} = 0{\cdot}8$$

It will be evident that since the bobbin wheel H contains 50 teeth its surface velocity will be equivalent to $\frac{4}{5}$ of 50=40 teeth, i.e. the same velocity as the spindle S which contains 40 teeth.

And further, since the different trains of wheels which transmit motion from wheels S and H to the spindles and bobbin are respectively the same, their initial

velocity ratio will also be the same until the differential train of wheels A^2, A, X and Z are set in motion from the cones.

Finally since the purchase value of the differential train is equal to $\frac{1}{5}$ revolution of socket bevel E, the speed of the bobbin wheel will likewise be increased by this amount for each revolution of the cone driven wheel A^2 or expressed in a simple formula it would stand—

The revs. of socket wheel E

$$= \left(\frac{4}{5} \text{ Revs. of B}\right) + \left(\frac{1}{5} \text{ Revs. of A}\right)$$

Fig. 281 is a perspective view of a Cone Drawing Box.

Fig. 281.
Cone Rover

CHAPTER XLIII.

FRENCH DRAWING.

71. *English v. French Drawing.* 72. *English and French Roving.* 73. *The bobbin creel.* 74. *French and English Rollers compared.*

THE function of French drawing, like its contemporary the English system, is to reduce the combed sliver and finished top, by a series of drawing operations, to a resultant *rove*, uniform in diameter and of required size and weight.

There are however fundamental points of difference which must be initially observed.

In the English system *twist* is a characteristic feature and essentially necessary for the production of yarns required for the manufacture of fabrics where clearness of definition must be manifest. In French drawing no actual twist whatever is put into the drawings of slubbing or rove. The object sought is the production of a yarn which is soft and full in handle and loose and lofty in appearance. For some special purposes, it is sometimes necessary to produce a yarn which, while it retains, in some respects, the characteristics of the typical worsted thread, yet in other respects manifests the characteristic peculiarities of a woollen yarn but is more uniform in

diameter through being repeatedly doubled and drafted as is correspondingly practised in the worsted trade.

Strictly speaking French drawing is a combination of the principles embodied in both the worsted and woollen processes of manipulation.

As a substitute for the twist in the rove, rubbing leathers, similar to those used in the woollen condenser, are designed and operated so as to impart the requisite, though temporary firmness and strength to the drafted rove which is then wound on to the bobbin by frictional contact with rotating horizontal rollers.

In French drawing there are usually about nine operations for an average Botany sort.

A perspective view of a French drawing machine for the roving operation by Messrs. Hall & Stells Ltd., Keighley, is illustrated at Fig. 282. The chief operative features in sequence, at each operation are :—a pair of back rollers, a pair of carrier rollers, one or more porcupine rollers, a roller provided with card teeth in a brass foundation, whose function it is to keep the sliver well up to, or slightly above, the level of the nip of the front rollers ; as this roller travels slightly faster than the surface speed of the back and carrier rollers its pins contribute to straighten out the fibres on their way to the drawing rollers which immediately follow. Next, the ends are rubbed or rolled into a soft round rove which is wound horizontally, as already mentioned on to empty bobbins ready for spinning which is usually done on the mule.

The above system is specially adapted to the manipulation of specific types of short fine wools, such as Buenos

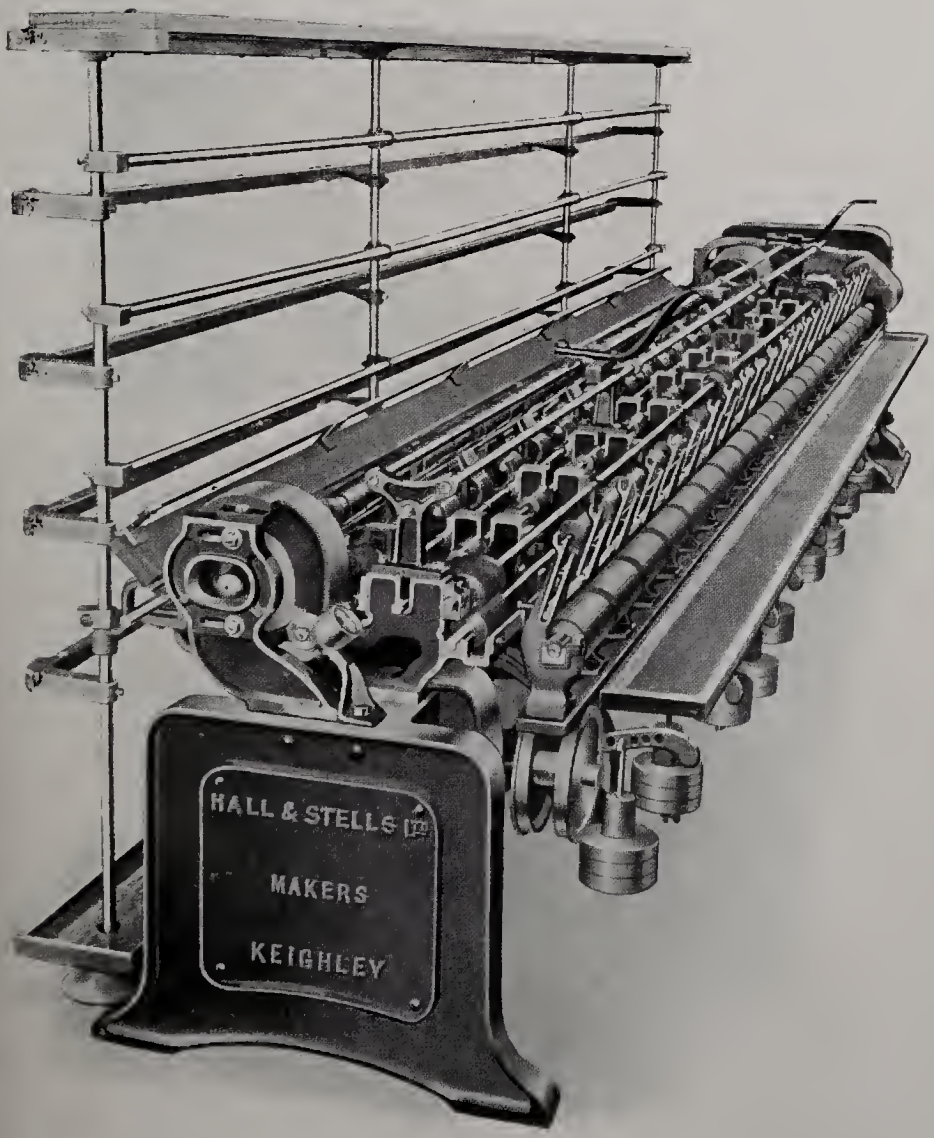

Fig. 282.

FRENCH DRAWING BOX.

Ayres, Swan river, some Sydney and Cape wools as well as a few crossbred types.

Many of these wools cannot be treated effectively and commercially upon the English system, but because of their relative cheapness, fineness and handle, they are frequently blended with other merinoes in the English system so as to produce a good yarn at a relatively reduced or reasonable cost.

The products of French drawing and spinning are most suitable and chiefly used for hosiery and fingering yarns and soft dress goods—light in weight, yet full and bulky in character comparatively. They are also suitable for fabrics required and used in hot climates as well as for firm medium textures which are milled including the billiard type of cloth.

This system also lends itself well to the production of soft and full union yarns which are composed of fine merino wools and cotton, usually blended in the intersecting gill boxes with five heads or divisions as follows :—

First section or head		with gills	—	wool
Second	,, ,,	without gills	—	cotton
Third	,, ,,	with gills	—	wool
Fourth	,, ,,	without gills	—	cotton
Fifth	,, ,,	with gills	—	wool.

These layers or doublings are all passed from their respective drawing heads and conveyed to the delivery head where they are combined and delivered into a can or made into a ball at will.

In French drawing there are usually fewer "ends" put up at the commencement, than at the end of the drawing operations, also the drafts are usually larger at the commencement than at the finish of the drawing, both of which it will be observed are diametrically opposed in principle to the English method.

In neither system are doublings and drafts the results of accident or specific theoretical intention, but are necessarily based on experience of the method of treatment and required characteristics of the finished product.

The following tables of doublings and drafts are for sets of French drawings of 9 and 8 operations respectively. The diameter of the back rollers is $1\frac{3}{8}''$ and the diameters of the front vary from 1″ to 2″.

Table I.

Operation.		Ends up.	Draft.
1	Intersecting gill box	3	5
2	,, ,,	2	4
3	,, ,,	4	4
	Weighings taken here.		
4	Drawing with rubbers		
5	,, ,,	2	3·8
6	,, ,,	4	3·8
7	,, ,,	4	3·8
8	,, ,,	4	4
9	,, ,,	2	4·25

Table II.

Operations following intersecting gills.

		Ends up.	Draft.
1	Gill drawing with rubbers	3	6
2	Drawing box	2	5
3	,, ,,	3	4·5
4	,, ,,	2	3·5
5	Reducer	4	4·3
6	Slubber	4	4·3
7	Intermediate	4	4·1
8	Roving	2	3·5

The rovings are reduced sufficiently to allow for a draft of 9 or 10 on the mule.

The French and German spinners vary slightly but immaterially in the number of doublings and drafts which they give.

Constructional Details of French Drawing.

Fig. 283 is a line diagram which shows the traverse of the combed sliver from the cans of the rectilinear comb to the balling head. The respective slivers A are conveyed between rotating smooth rollers B and inclined guide C to the nip of the back rollers, then over a porcupine roller D which it should be observed supports the sliver slightly above the periphery of the two bottom front rollers E on which the leather covered top roller rests and rotates. The combined slivers then pass forward through a funnel F to the balling head G which

rests in rotary and frictional contact with two rotating balling rollers H.

Fig. 284 shows a transverse section of the arrangement of the first drawing and gill box but with the gills omitted and which are usually of the intersecting type (see Fig. 228, Vol. II.) B indicates the sliver, D the back rollers,

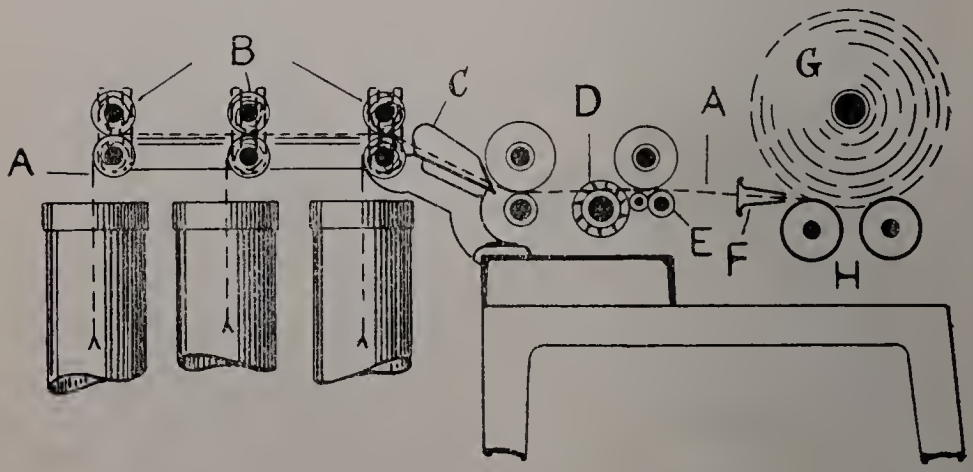

Fig. 283.

E the carriers, F the porcupine rollers of which, in this machine, there are three, two at the bottom and one at the top. The two bottom rollers rotate clockwise and the top roller counter clockwise while the respective brushes H which keep them clean rotate in the same relative direction. The function of these rollers is to assist in straightening out the fibres somewhat and to bear them well into the nip of the front rollers G, which are fluted, the top one being provided with a leather of the usual type as shown.

Fig. 285 is a transverse section through the various rollers of a typical drawing box. It illustrates the line of traverse of the combined slivers to the drawn slubbing or rove. A is a smooth roller with guide for directing and conveying the slivers B forward to and through a second guide bar C to the nip of the back rollers D. A pair of intermediate carriers is shown at E, the porcupine

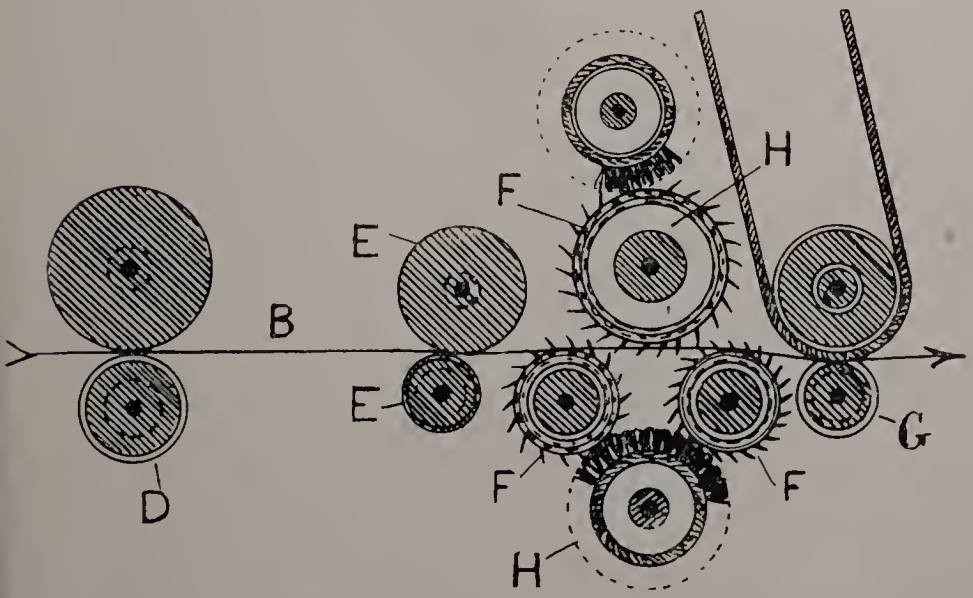

Fig. 284.

roller at F and the front or drawing rollers at C. The bottom and upper "rubbers" combined with their respective rotating and lateral oscillating rollers are shown at H and I respectively. An additional shaft and roller J is placed in the aperture of the upper leather H for the purpose of keeping the two leathers in close rotary and oscillating contact with the sliver as it is passing forward to the balling heads or bobbins marked

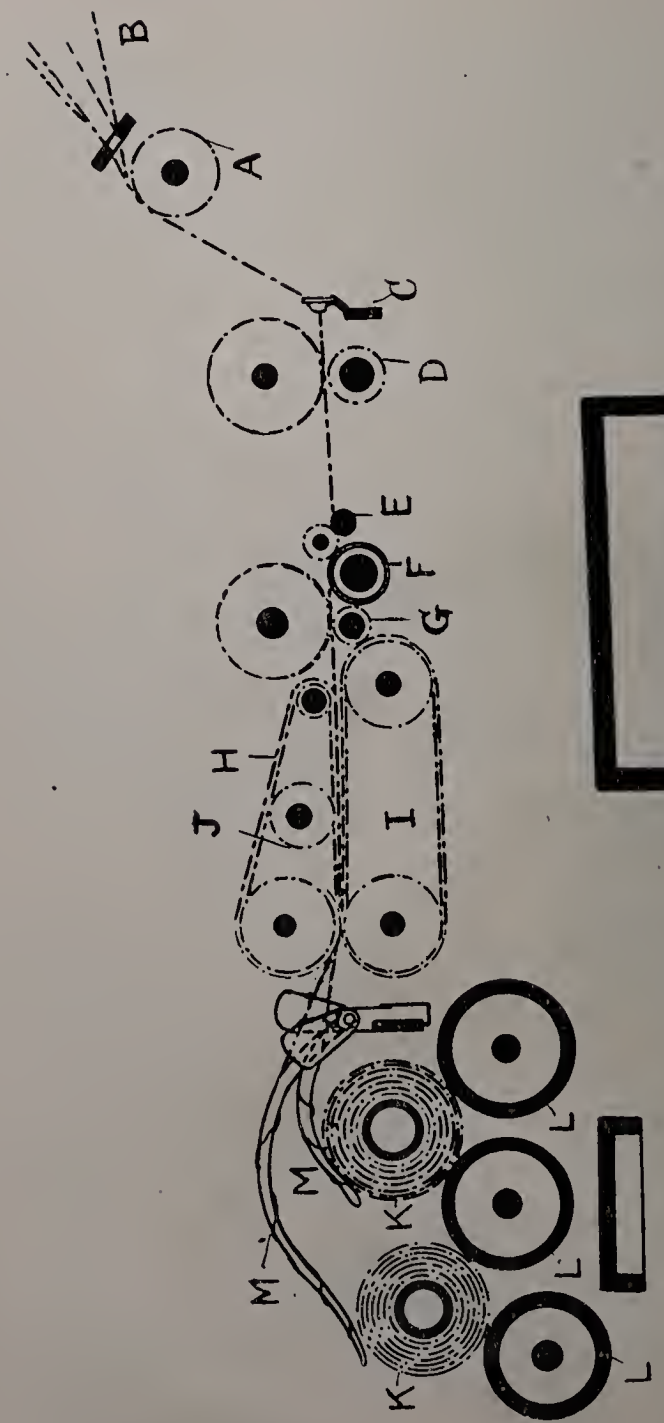

Fig. 285.

K. These bobbins are filled, by frictional contact with the positively driven rollers L. The slivers are directed on to the bobbins by the respective lever guides M.

A detached, part front view of the rollers L and bobbins K is shown at Fig. 286, together with an arrangement of mechanism designed to produce the required reciprocating lateral movement of the rubber rollers. The table M on which the rubber rollers are carried, is connected through a bracket N, rod O and an adjustable stud P to the quadrant arm Q pivoted and free to oscillate about its pivot stud R. The periphery of the quadrant arm Q is provided with rack teeth S into which the teeth of a rack pinion T, are geared. The pinion T is compounded with the stud shaft U of the large bevel wheel which is alternately rotated, as indicated by the double arrow, clock and counter clockwise, through the positive rotary action of the ordinary train of spur wheels indicated to the left of the illustration.

Fig. 287 shows a side view in elevation and partly in section of a method adopted for applying the required weight to the top front rollers G. The essential details of the apparatus are as follows :—A double hooked rod S is suspended from the arbour of rollers G ; the bottom hook of S supports a link rod T which passes through a V-shaped aperture V, formed in the weighted lever U. This lever is pivoted at W which in turn is compounded with the machine at X.

The link rod T is adjustable to the lever U by the spiral spring Y and thumb screw as shown. A movable weight Z combined with the lever U belonging to the

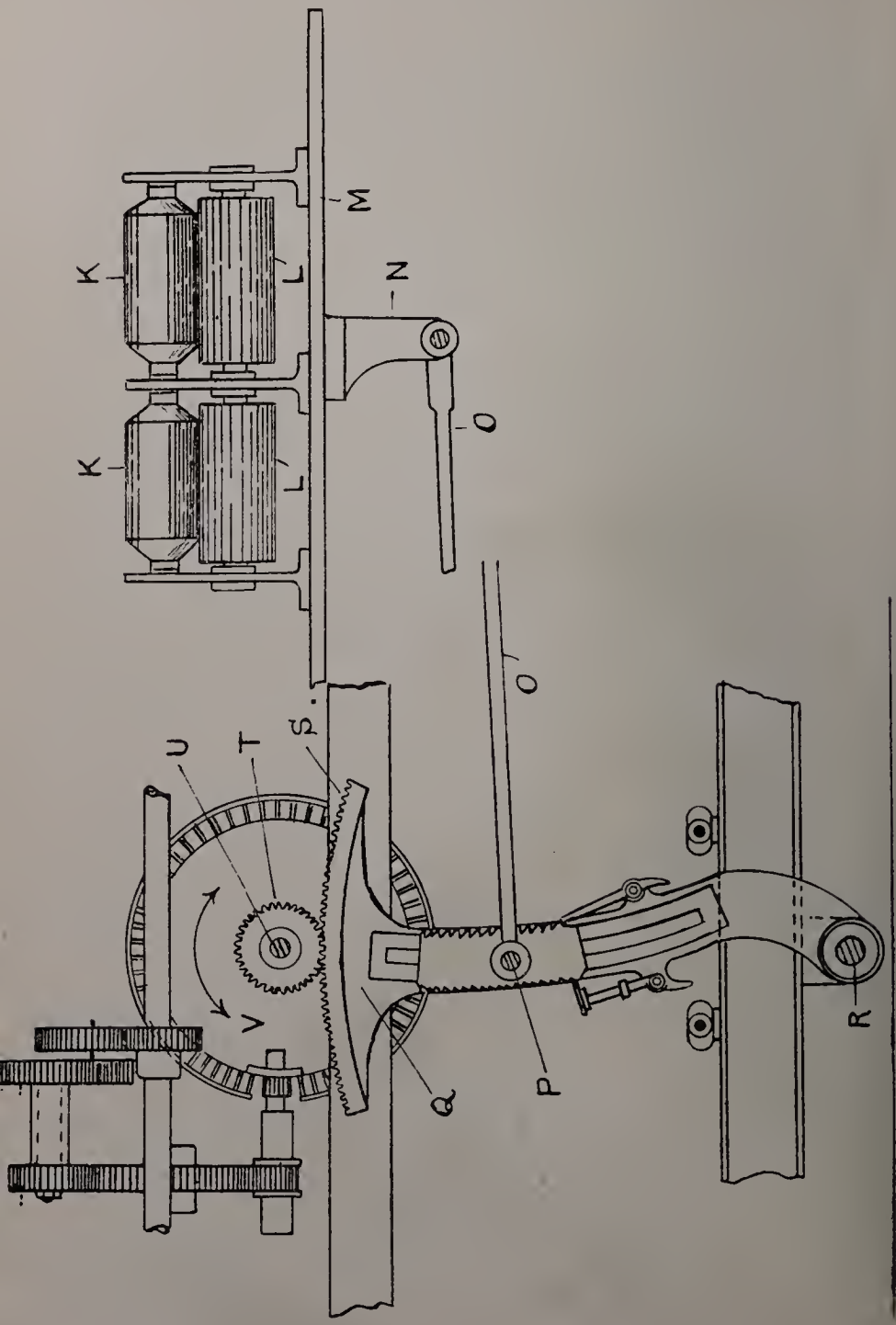

Fig. 286

second order of levers is designed to apply the required load pressure to the front rollers.

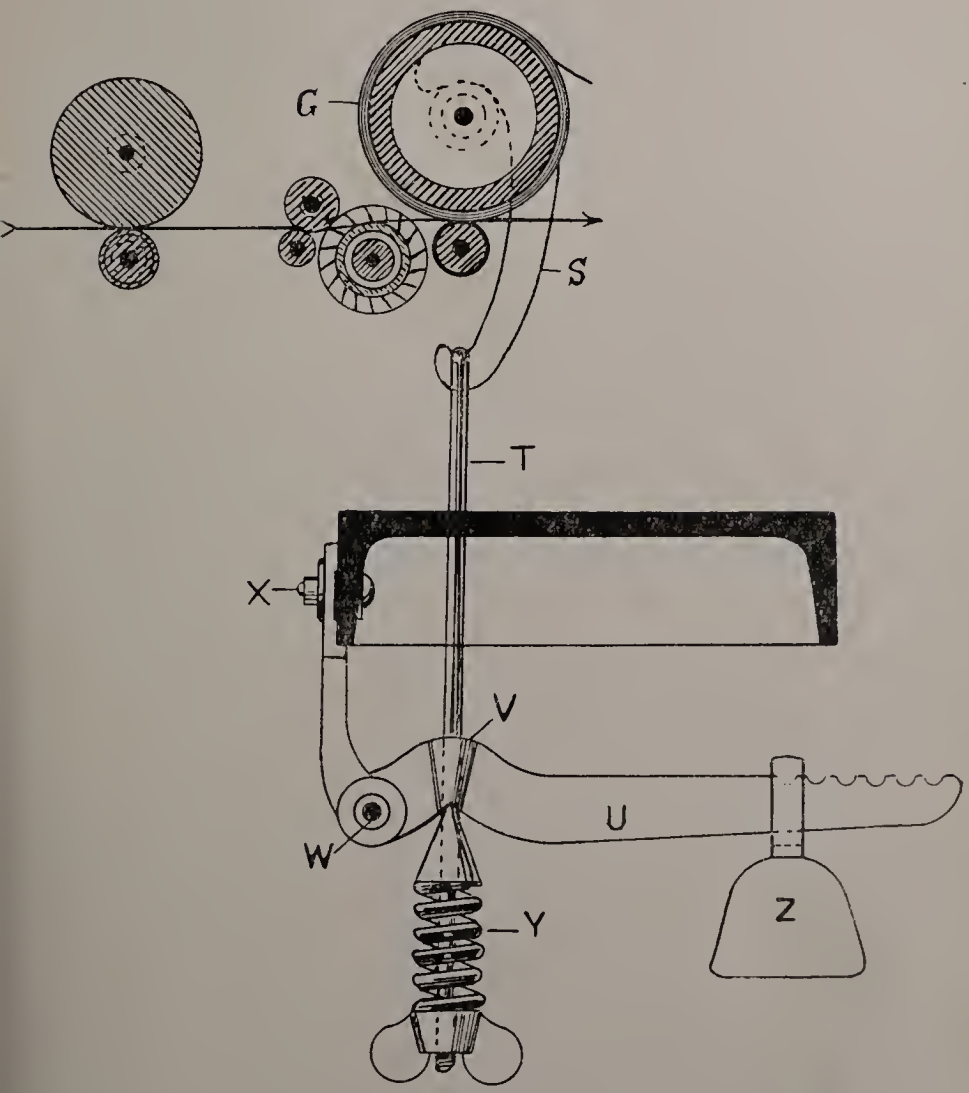

Fig. 287.

Fig. 288 is a plan view of one method of driving the various details of a French drawing box. The fast and

loose pulleys are shown at 1 and the shaft for same is indicated at 2. 3 is a spur pinion on shaft 2 which drives through an intermediate spur wheel 4, on shaft 5, the stud pinion 6 on the long shaft 7. This shaft carries a pinion 8 which gears into and drives a spur pinion 9, compounded with the front roller shaft G.

A spur pinion 10 on shaft 7 drives through a single intermediate wheel 11, the stud wheel 12 on stud 13 with which is compounded the stud pinion 14 whose teeth intermesh with and drive the spur wheel 15 compounded with the back roller D.

A pinion wheel 16, on the back roller shaft D, drives through a single intermediate wheel 17, a spur pinion wheel 18 which is fast to the carrier shaft E. A spur pinion 19 on back shaft D, drives through the stud wheel 20 on stud 21 (with which it is also compounded), a stud pinion 22 whose teeth intermesh with and rotate the spur wheel 23 compounded with the shaft of the porcupine roller F.

A spur pinion 24 on shaft 5 drives through a single intermediate wheel 25, a spur pinion 26 on the shaft 27 with which is compounded the broad spur wheel 28. This wheel drives through a single stud wheel 29, the pinion spur wheel 30 on one end of the main "rubber" shaft H.

The lateral oscillation of shaft H is produced as follows: Compounded with the shaft 27, a spur pinion 31 drives the stud wheel 32 on stud shaft 33 with which is compounded the stud pinion 34 and which in turn drives the pinion 35 on shaft 36. This shaft carries a fixed

bevel 37 which gears into a larger bevel 38 on a vertical shaft 39 with which is constructed a crank 40 and pin 41 in turn connected through the link 42 and stud 43 with the frame work 44 which is suitably supported and carries the " rubber " rollers and shafts H and I.

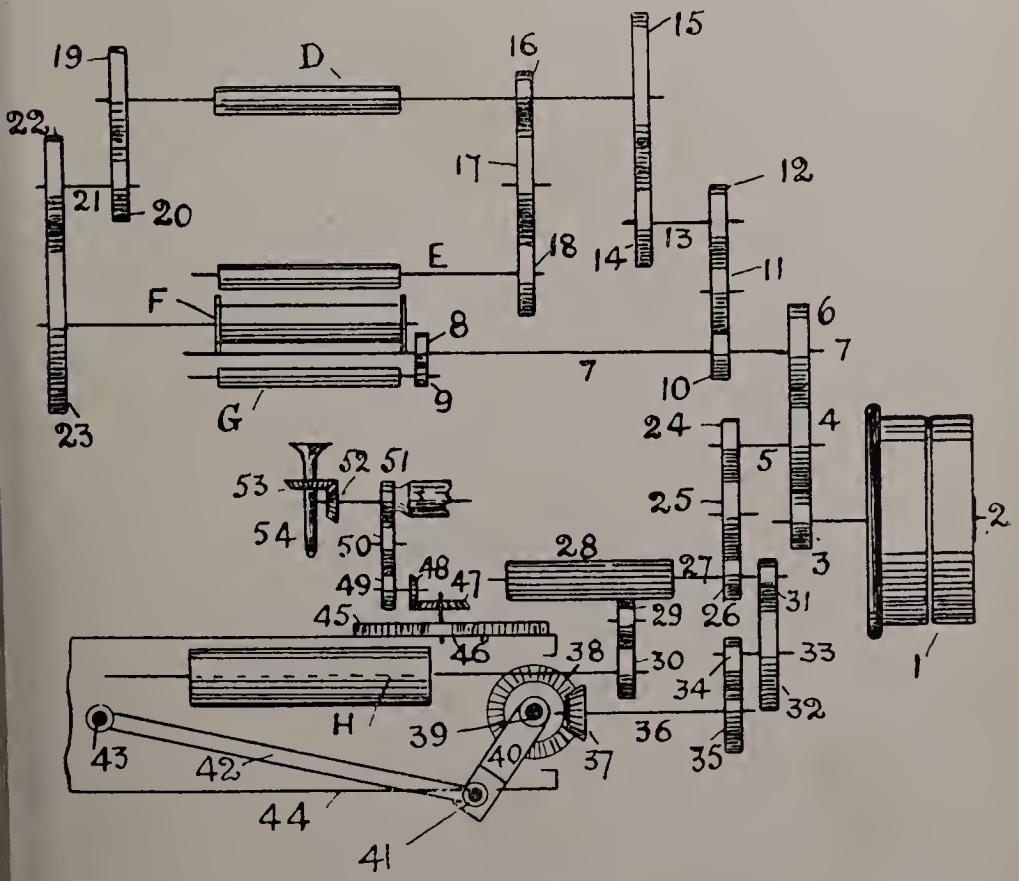

Fig. 288.

A simple train of wheels, 45 to 53 inclusive, suitably supported and driven as shown produces the required rotary movement to the funnel 54.

The continued rotation of the machine pulleys through the gearing already described, transmits the required rotary velocities to the back rollers, carriers, porcupines, front rollers, " rubber " rollers together with the lateral oscillation as detailed above.

The numerical values of the trains of wheels are as follows :—Nos. 1, 8″ diameter ; 3—42 teeth ; 6—80 teeth ; 8—30 teeth ; 9—20 teeth ; 10—35 teeth ; 12—63 teeth ; 14—40 teeth ; 15—100 teeth ; 16—32 teeth ; 18—30 teeth ; 19—80 teeth ; 20—40 teeth ; 22—60 teeth ; 23—120 teeth ; 24—30 teeth ; 26—24 teeth ; 28—18 teeth ; 30—65 teeth ; 31—30 teeth ; 32—90 teeth ; 34—36 teeth ; 35—36 teeth ; 37—24 teeth ; 38—48 teeth ; 45—100 teeth ; 46—16 teeth ; 47—31 teeth ; 48—20 teeth ; 49—22 teeth ; 51—16 teeth ; 52—20 teeth ; 53—20 teeth.

71. English v. French Drawing.

No matter whatever system of drawing is adopted and sequence of operations practised, the primary object is always the production of a roving suitable for conversion into yarn of the type required.

The combined influence of the numerous factors associated both with the raw material and the mechanical appliances for manipulating it, render, however, the production of a perfect roving practically impossible. At the best it is only possible to approximately produce, with existing methods, an arrangement of fibres, which yield a cylindrical thread possessing a similar number of fibres in the transverse section and equal in diameter at all points.

The variation which always exists both in regard to the length and thickness of the individual fibres in all the various classes of wool, precludes anything more than an attempt to reach the ideal indicated. Notwithstanding the most careful selection in classing fleeces and subsequent sorting, together with the extraction of the shortest fibres in the preparatory and combing operations there still remain many wide differences in the fibres constituting the rove.

In French drawing as previously intimated, as the slivers are made lighter, the number of doublings are generally increased so that the resistance during drafting is relatively greater as a consequence and further, a more complete admixture of the different lengths of fibre results at the stage where it is most beneficial. In contrast with this factor, in the English system, the increased amount of twist in the reducer strands makes it possible to give a relatively larger draft, without detriment, in the roving boxes.

The requisite intimate amalgamation, of the long and short fibres remaining in the combed top, makes it imperative, in the drawing operations, of any system to give as many doublings as possible at one stage or another so as to prevent any undue separation of the long and short fibres by the pull of the drafting operations and also to reduce to a minimum any irregularities which are certain to occur whenever too few doublings are given and which defects must necessarily be reproduced in the yarn, since the drawing is the last stage where the correction of irregularities can be made with any degree of success.

In comparing open, cone and French drawing, the larger number of doublings in the later stages of the drawing may appear theoretically correct, as in French drawing, yet the conditions are so dissimilar, in the other systems, as are also the requirements in the subsequent process of spinning that very little advantage can be gained by labouring the point here.

To thoroughly straighten and parallelise the fibres, as required in the English system, involves the use of relatively long drafts which combined with the unavoidable tension put upon the slubbing and rove, during bobbin winding, makes it imperative to put twist into the prepared strands to increase the resisting capacity of the short fibres and prevent them from being carried forward by the long fibres. Incidentally this is the reason why an increase of twist must be given for each decrease in thickness of slubbing.

When the fibres are all very short it is difficult to successfully draft them and at the same time give them the correct amount of twist which their fineness requires.

In French drawing, the fact that the fibres are free from any twist throughout their entire length and are only rolled together, renders them incapable of resisting any prolonged draft or tension. It is because of this inherent weakness that the porcupine roller is introduced. It is so adjusted that its uppermost surface is slightly higher than the plane of the nip of the front rollers and so holds the wool as long as possible and thereby reduces the above weakness to a minimum.

72. English and French Roving.

The difference between the English and French rovings lies chiefly in the mechanical way in which the fibres are arranged. In the English system the fibres are all spirally twisted in the strands and usually in the same direction, the result being that every individual fibre receives some amount of treatment at each operation from the two spindle gill box to the roving, all of which to some extent, contribute towards the production of a sound, regular, clear rove and worsted yarn.

Occasionally reverse twisting is adopted at alternate drawing boxes whenever a special fulness and softness of yarn effect is required. In the French system the fibres develop a wavy effect and do not lie in any definite direction but are characteristically soft in handle and "fluffy" or full in appearance. The French drawing and subsequent mule spinning are best calculated to preserve and emphasise these qualities. French drawing is, however, limited in its scope and will not supplant either open or cone drawing.

73. The Bobbin creel.

The bank or bobbin creel is of the perpendicular order and consists of two or more tiers in height with provision for a single or double row of bobbins in each tier. The full bobbins are supported on loose skewers having tapered ends and placed vertically in the creel. The bases of the bobbins rest freely in small cups; near the base of each skewer a small round "shoulder" is formed on which the bobbin rests and rotates with the minimum of friction.

In some cases the slivers pass over a rotating smooth roller which obviates the tendency to generate friction as when the ends pass over a fixed rod.

74. French and English Rollers compared.

In the French system of drawing, as in every other, much difference of opinion exists between practical men with respect to the most suitable kind of bottom roller to use. Some affirm that scratch fluted rollers are the best, while others with equal confidence contend for deep fluted rollers as giving the best drawing results.

Usually the front rollers, of the first box are tooth and pinion fluted. A revolving leather is used with the top roller as in Fig. 284. The bottom rollers of all the remaining drawing boxes are scratch fluted. The top rollers are covered with leather, though here again differences of opinion prevail as to whether hard or soft covering on iron, wood or cork is best. The tooth and pinion fluted rollers naturally possess the greatest drawing properties, but they also produce the most variable results. It is seldom found that the leathers are perfectly regular throughout their full circle, especially at the lap joint. It is also difficult to obtain two single leathers which are exactly alike and run well together, for which reason, a broad leather is sometimes employed which covers both rollers in a double head can gill box.

Scratch fluted rollers have been found to be more economical and productive of better results than deep fluted rollers even in open drawing but in French drawing which is primarily suited for the shortest wool fibres and where twist is absent they are naturally more generally employed.

CHAPTER XLIV.

WORSTED SPINNING.

75. *Object and Function of Worsted Spinning.* 76. *Difficulties due to varying diameters of the Wool Fibres.* 77. *Twist and its influence on the Yarn.* 78. *Amount of Twist in Worsted Yarns.* 79. *Fly Spinning—Rove to Bobbin.* 80. *Cap Spinning.* 81. *Cap Spinning Machine Details Draft and Twist.* 82. *Details of Cap Spindles and Driving Tubes.* 83. *Ballooning.* 84. *Ring Spinning.* 85. *Ring Spinning Frame.* 86. *Construction Details of Ring Spindle.* 87. *Tension on Tapes driving the Spindles.* 88. *Twist gearing on Spinning Frame.*

75. Object and Function of Worsted Spinning.

THE typical Worsted thread is, as now well understood, designedly constructed of a number of wool fibres, all arranged as parallel as possible, but longitudinally overlapping and sufficiently embracing each other as to produce a yarn which, when woven will contribute towards the production of a clean and well defined pattern, and also exercise a restraining influence on the natural tendency of the wool to felt.

Three essential factors must be considered in the actual operation of worsted spinning; (1) the tenacity and drafting capacity of the raw material; (2) the twist

and (3) the winding of the yarn on to bobbins, spools or tubes.

76. Difficulties due to varying Diameters of the Wool Fibres.

There are many inherent difficulties which militate against the production of a uniform thread, the chief of which is perhaps, the extensive variation in the diameters of the raw material. Primarily an attempt is usually made to secure uniformity in diameter by selecting the most suitable materials, but even in the choicest and best selected varieties of wool there is a wide variation exhibited in the diameter and length of the individual fibres.

A selection of fibres from a staple of fine merino wool exhibited variations from $\frac{1}{3400}$ to $\frac{1}{1750}$ of an inch. Four fibres of crossbred taken from a single staple showed variations from $\frac{1}{912}$ to $\frac{1}{710}''$ and four fibres from a staple of Lincoln wool varied in diameter from $\frac{1}{630}$ to $\frac{1}{420}''$.

The increasing practice, of mixing the different brands and types of wool to form a specific blend, has discouraged sorting or fine classification and to a large extent good breeding.

77. Twist and its influence on the Yarn.

In the production of a worsted yarn the wool fibres can only be retained in their adjusted and required position, and made suitable for weaving, by imparting the correct amount of twist to the spun yarn. Generally, the object of the spinner is to secure a similarity of appearance in the different counts of yarns

spun from the same quality of wool, so as to enable the manufacturer to secure the same relative effect in different weights of cloth.

In the cotton and flax trades, definite rules have long been established to determine the correct amount of twist for warp or weft threads, but these vegetable fibres do not vary in length in any way comparable with animal fibres and neither is their physical structure anything like so complex.

In the spinning of worsted yarns there is apparently no empirical or scientific rule which can be applied to a correct determination of the amount of twist necessary for the different sorts of yarns—not only because of the many purposes which they may have to serve, but also on account of the length, flexibility, number of serrations and curvatures in the yarns—all contributary factors to the holding power of the fibres upon each other ; e.g. If two yarns are spun from two different lengths of fibre to the same count, twist and diameter, the yarn containing the longest fibres will exhibit the greatest stretch and resist a greater load test which incidentally demonstrates that the twist in that yarn might have been less.

Frequent attempts have been made to devise a simple formula by which the correct amount of twist for the different sizes of yarns might be readily ascertained. A notable example is based on the square root of the counts of the yarn which incidentally varies in the same ratio as its diameter and which is probably the reason why some theorists have assumed that the twist should

vary in the same relative ratio, but unfortunately these theories do not coincide with the best results obtained in practice, e.g. An average of 6 turns per inch is usually given for 16s Botany. The relative twists for 64s and 1^S based on the square root of the counts are 12 and $1\frac{1}{2}$ respectively. The former number of turns is only about half that usually given in practice, whilst the latter would produce a yarn much too hard for usual requirements.

A greater divergence is manifest by selecting 64s Botany which contains 24 turns per inch. On the basis of the square root theory, the relative twists for 16s and 1s are 12 and 3 turns per inch respectively. The former is twice, and the latter about nine times the approximate actual twists per inch for these counts.

The application of the foregoing empirical rule, is only approximately suitable within narrow limits and range of yarn numbers.

It is perhaps important to note that the angular disposition of the fibres is not the same for all counts but varies with the size of the thread as well as the number of turns. It is stated that the laws of reflection demonstrate that the angle must increase with a decrease in surface of reflection and vice versa.

The angle which the fibres should form for the same class and kind of material depend upon the purpose for which it is intended, hence, in practice, the twists may be conveniently classified as hard, medium and soft.

78. Amount of Twist in Worsted Yarns.

The amount of twist actually given for different classes and counts of worsted are so varied that only an approximate estimate can be given, e.g. the amount of twist given to soft hosiery yarns as compared with other yarns to the hardest mottled twist and warp yarns for whipcords, increases from 1 to 100%.

Experience over many decades has necessarily demonstrated and established the approximate amount of twist that is suitable for any given class and range of yarns. These may be divided into normal twists of warp and weft for the worsted coating trade. Harder twist yarns are made for whipcord and some types of cloth intended for hard wear and special effects. Worsted yarns for the manufacture of cloth for ladies' costumes and dress goods require to be softer in the handle and consequently receive a relatively smaller amount of twist. Pile goods including carpets, require yarns with the minimum amount of twist so as to spread and fill out better after the weaving. For a like reason, hosiery yarns require relatively a small amount of twist.

The following are a few examples, selected from practice, of the amount of twist put into normal worsted yarns in the worsted coating trade.

Weft Yarns.	Turns per inch.
1/12s Worsted	6
1/16 ,,	$6\frac{3}{4}$
1/20 ,,	$7\frac{1}{2}$
1/24 ,,	8
1/32 ,,	$9\frac{1}{2}$
1/36 ,,	10
1/40 ,,	11
1/56 of 70s top	$9\frac{1}{2}$

Warp Yarns	Folded.
2/16s Crossbred	6 Turns per inch.
2/24 ,,	10 ,,
2/30 ,,	11 ,,
2/36 Botany	14 ,,
2/40 ,,	14½ ,,
2/50 ,,	15½ ,,
2/56 ,,	16¼ ,,
2/60 ,,	19½ ,,
2/70 ,,	23½ ,,
2/80 ,,	29½ ,,

All yarn should be produced with the minimum amount of twist that will satisfy the purpose for which it is intended, because the ratio of production varies directly but inversely to the twist.

THROSTLE SPINNING.

There are three types of throstle spinning machines, flyer, cap and ring, which embody the principle of continuous and concurrent drafting, twisting and winding as distinguished from the intermittent performance of these respective functions on the mule.

Each system has its special application and is designedly suitable for different classes of wool and counts of yarn.

Chronologically the flyer comes first as it also does in the production of the most characteristically constructed worsted thread. Its use is now, however, restricted largely to the production of lower numbers and quality of yarns, and also mohair and lustre yarns.

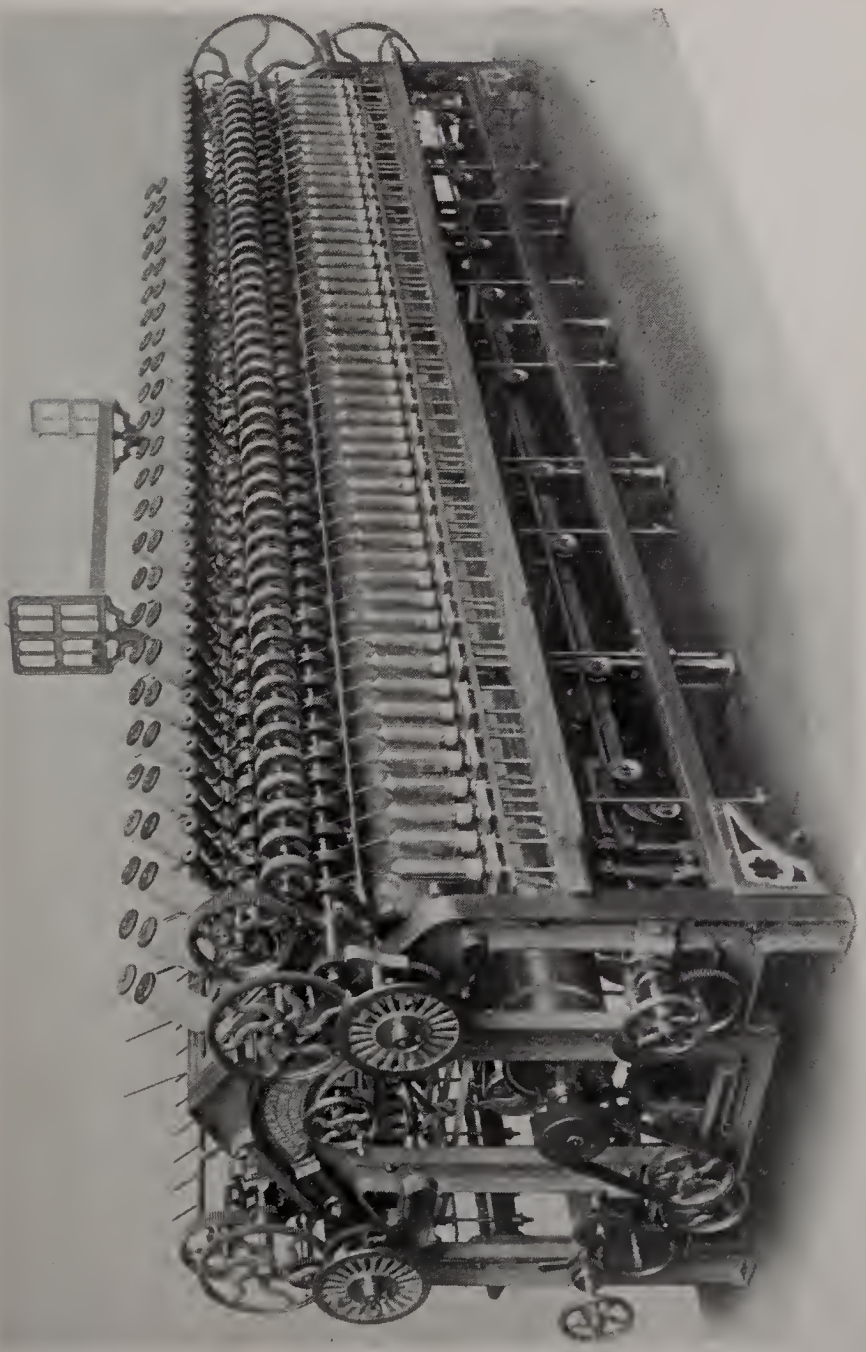

Fig. 289.
Cap Spinning Frame

Cap and ring spinning are both used for fine Botanys and crossbreds down to the medium numbers—cap spinning being most pre-eminently in favour.

The points of difference between the three systems are chiefly manifest in the methods adopted for imparting twist to the spun thread and distributing the yarn on to the bobbin.

Yarn, during the process of spinning is wound on to one or other of three forms of bobbin.

First the double-headed bobbin, whenever the material is required for subsequent doubling or for warp yarn. For filling this class of bobbins the traverse of the builder is simply reciprocal.

Second, a tapered bobbin usually denominated a spool is used for weft yarns. This spool has to be built up by a short traverse and a relative and periodical lowering of the lifter. This ensures the yarn being wound in a tapering form in which state it can easily and without undue friction be drawn off the spool for weaving. This form of bobbin is gradually increasing in favour and use for warp yarns also.

Third, a paper tube or shell, which when full tapers at both ends. This form of storage of the spun yarn is usually intended for export trade, see Chapter XLV.

Throstle Spinning Machine Details.

Fig. 289 is a perspective view of a worsted spinning frame.

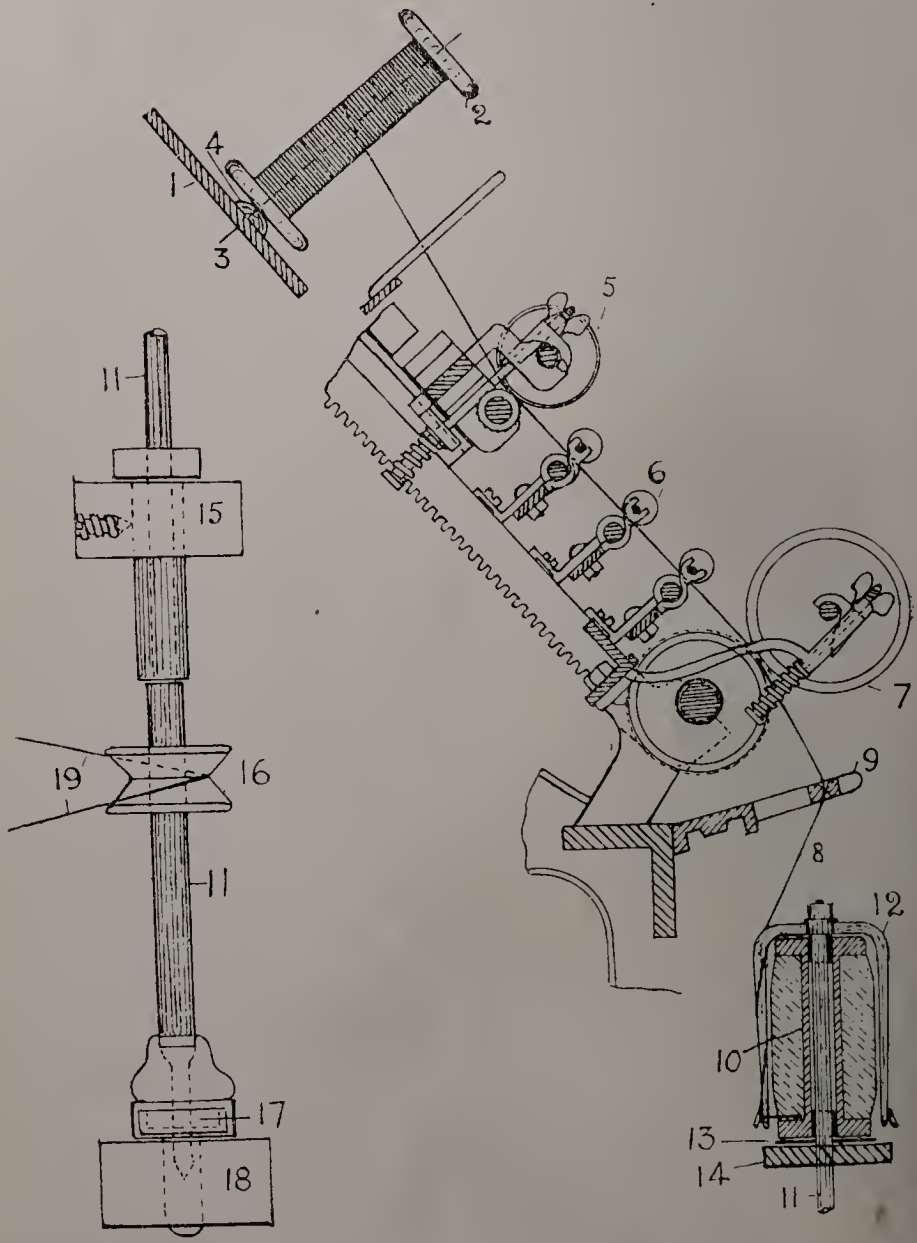

Fig 290

79. Fly Spinning-Rove to Bobbin. Fig. 290 shows the direction of the traverse of the rove to the flyer and bobbin.

1 is the bobbin stand, 2 the roving bobbin on peg 3 which is compounded with the stand 1 and carries a cone shaped piece of metal 4 on which the bobbin rests and rotates with the minimum of friction. The back rollers are shown at 5, three adjustable rows of carriers at 6, the front rollers at 7, the drawn thread at 8, the guide or top board at 9 and the spool at 10, the spindle at 11 and the flyer at 12. The spool rests and rotates on the drag washers 13 in turn carried by the lifter or builder plate 14 which is suitably supported and free to reciprocate in a vertical plane. The spindle 11 is sustained in a true vertical plane by the influence of a strong rail 15 which extends between the gables of the machine. 16 is a whorl compounded with the spindle 11, 17 a cone shaped brass footstep containing a constant supply of lubricating oil in which the tapered end of the spindle 11 rests and rotates. 18 is the bottom cross rail.

Fig. 291 illustrates the driving of the front rollers and spindles and also supplies the necessary details of mechanism which produce and control the twist put into the yarn.

A driving band 19 to the spindle passes around the whorl 16 and cylinder 20 compounded with shaft 21 to which shaft is also compounded a spur pinion wheel 22 which communicates rotary motion through the intermediate wheel 23 to the stud wheel 24 with which is compounded the spur change pinion 25, both free to

rotate on the adjustable stud 26. The teeth of the pinion 25, intermesh with those of the front roller wheel

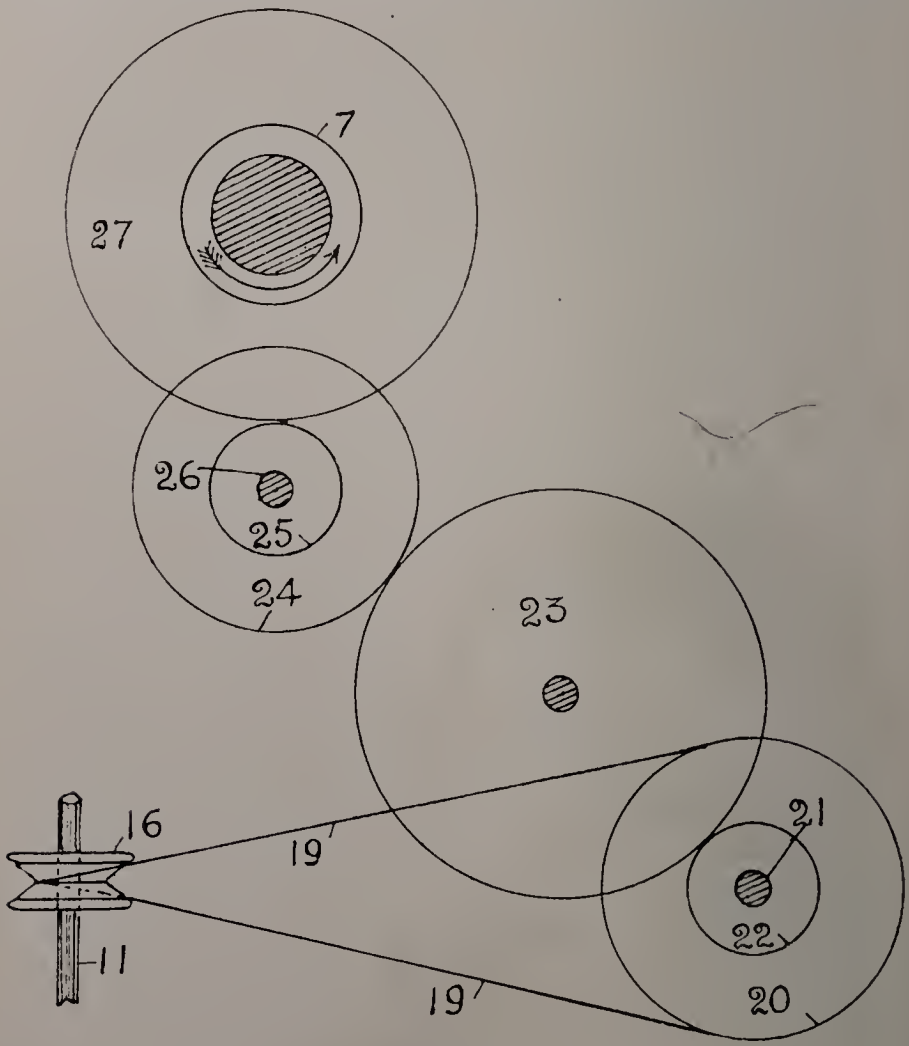

Fig. 291.

27 to drive the front rollers 7 and from which the back rollers are driven and the draft regulated after the manner of the drawing boxes.

80. Cap Spinning. The cap method of spinning now occupies the premier position in worsted spinning largely on account of the high speed at which it is possible to run the spindles or more

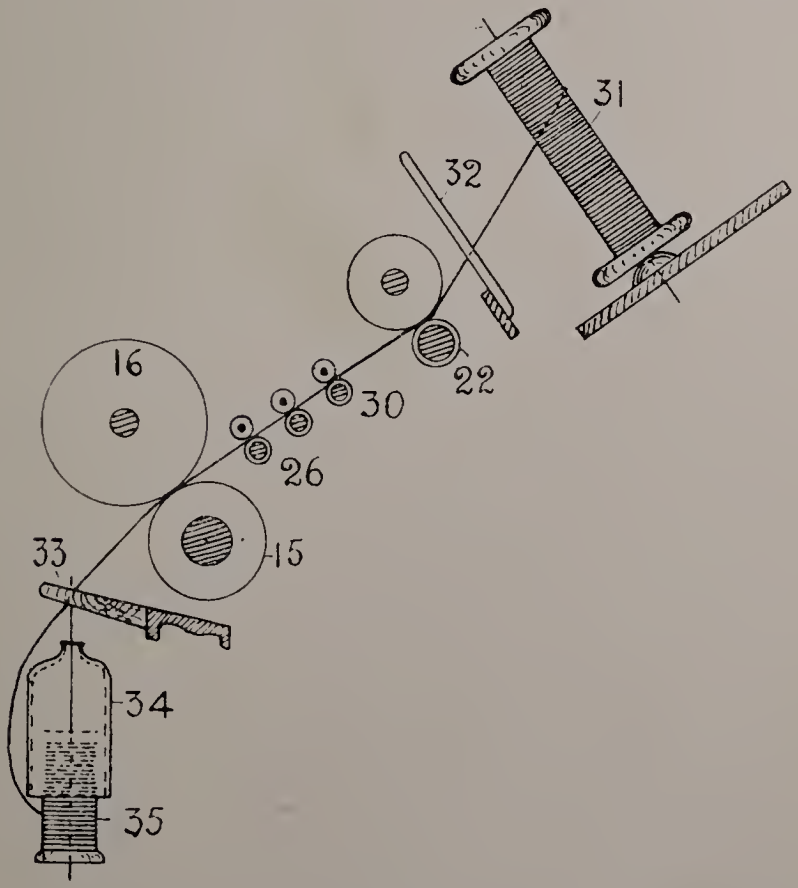

Fig. 292.

correctly the tubes, on the spindles, for the latter are stationary. The average speed of the tubes is 6,000, to 7,000 revolutions per minute, whilst the flyer spindles seldom exceed 2,500 revolutions per minute. For automatic *fly* doffers the speed may be 3,500 r.p.m.

The tubes with the bobbins could run even faster as far as the mechanism is concerned and the production would be correspondingly increased, but the rapid gyration of the yarn through the air deteriorates its quality out of all proportion to the gain in production.

Cap spinning also finds much favour amongst worsted spinners because of its adaptability for spinning a wide range of Botany, crossbred and fine yarns.

Apart from the spindle and its complements, the cap spinning frame is similar to the fly spinning.

Fig. 292 shows, in elevation, the traverse of the rove from its bobbin to the cap and spool. 31 is the rove bobbin, 32 the guide for the rove to and through the nip of the back rollers 22, carriers 30 and 26, the rollers 15 and 16, the top or yarn guide board 33, to the cap 34 and bobbin 35 to which the drawn yarn is attached.

The following machine details show the relation of the various parts of the spinning to each other for cap, ring and flyer frames.

81. Cap Spinning Machine details Draft and Twist.

Fig. 293 is an end view of a cap spinning frame and Fig. 294 a plan of the same side and machine.

The numerals in each diagram of like value refer to similar details.

1 is the frame or cylinder shaft from which all other parts of the machine are driven ; 2 shows the fast and loose pulleys on same ; 3 is the tin cylinder from which rotary motion is communicated to the whorls and tubes 4 (see Fig. 295) supported and loose on spindle 5

in turn rigidly carried in the cross rail 6. The whorl and shell 4 rest and rotate freely on the lifter plate 7. Two

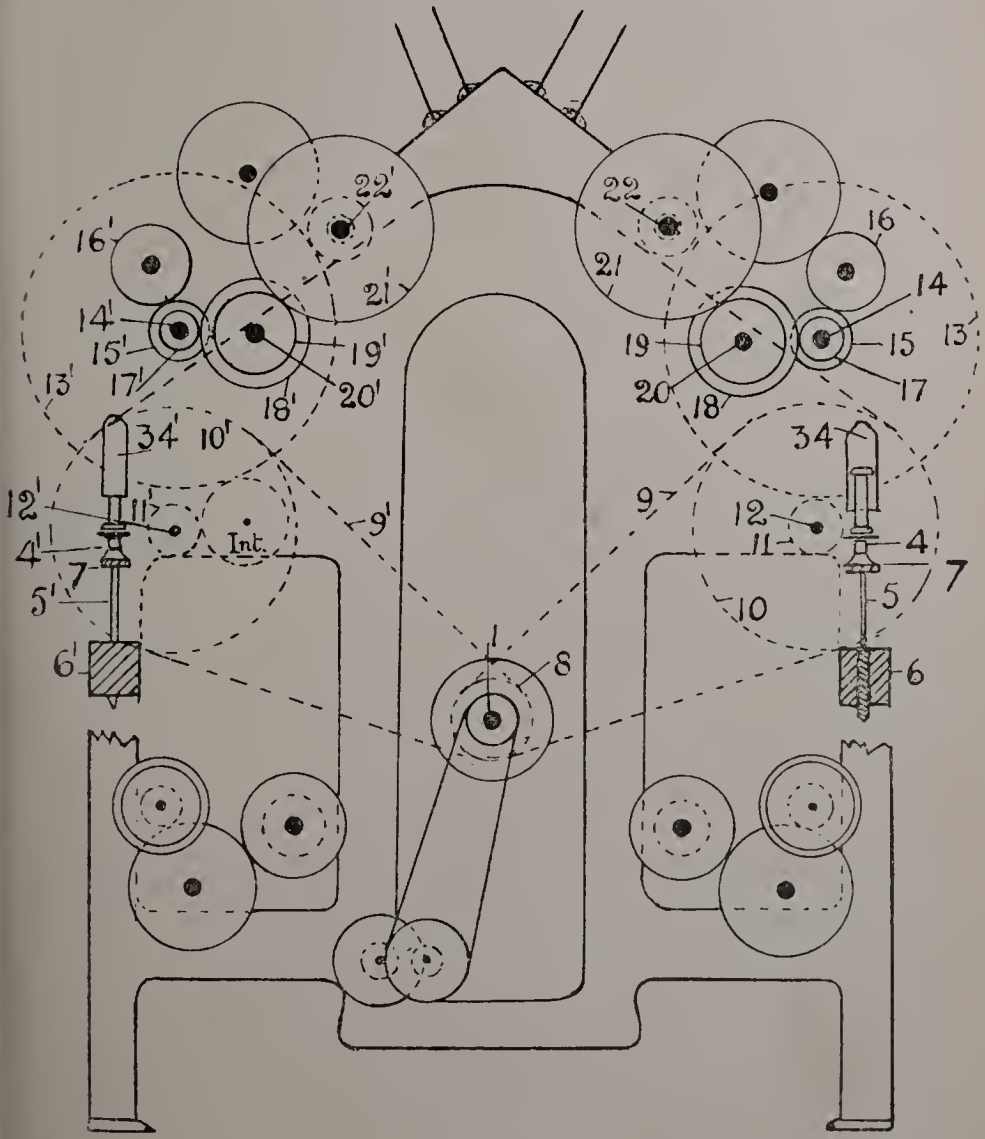

Fig. 293.

pulleys 8 and 8^1 are compounded to the cylinder shaft 1. One of these pulleys by means of a belt 9 drives a pulley

10 compounded with a stud pinion 11, free to rotate on the stud 12. The teeth of pinion 11 intermesh directly with the teeth of the front roller wheel 13, or through, as shown, on the left hand side, a single intermediate wheel according to the direction of rotation required. 14 is the front roller shaft, 15 the boss roller and 16 the top roller.

A spur change wheel denominated the draft change pinion 17, gears into a stud wheel 18 compounded with a stud pinion 19 mounted on an adjustable stud 20. The stud pinion 19 gears into and drives a spur wheel 21, fast on the bottom back roller 22. The front and back rows of carriers 26 and 30 are driven by spur gearing from the back roller 22 as shown in the plan. A spur pinion 23 on the back roller shaft drives, through a single intermediate wheel 24 a spur pinion 25 compounded with the front carrier roller. A spur pinion 27, at the opposite end of the machine and back roller, drives, through a single intermediate wheel 28 a spur pinion 29 fast on the back row of carriers 30.

82. Details of Cap Spindles and Driving Tubes. Perhaps the most essential features in the cap spinning frame are the stationary spindle and the rotary tube which retains and positively rotates the bobbin in sympathy with itself.

Fig. 295 shows a vertical section of the spindle and tube with whorl, etc. 5 is the spindle which is threaded near its base and is screwed into the bolster rail 6 and may be further secured by a screw nut P.

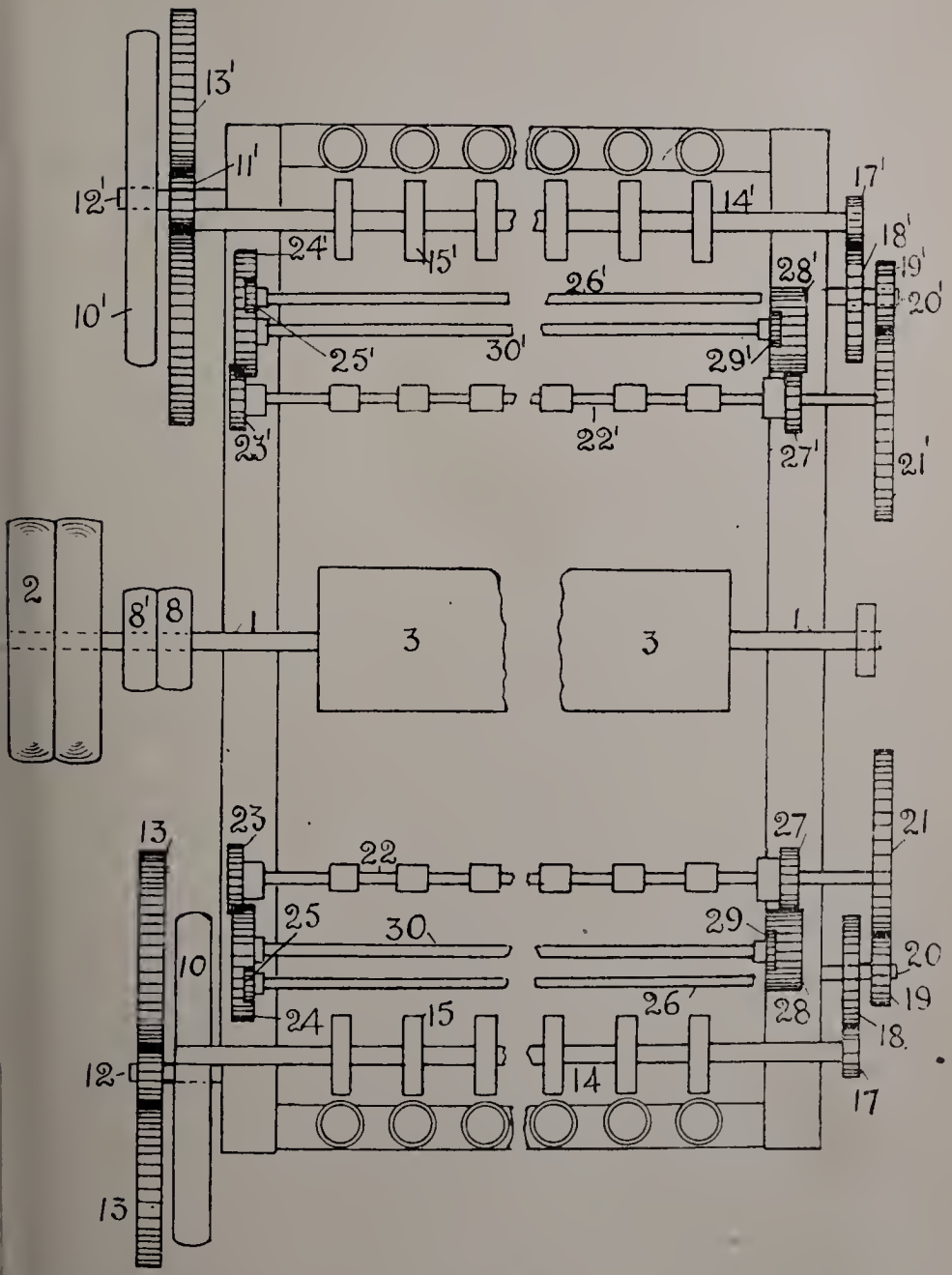
13'
11'
12'
10'
24'
15'
14'
17'
18'
19'
20'
26'
28'
25'
30'
29'
23'
22'
27'
21'
2
8'
8
1
3
3
1
13
23
22
27
21
25
30
29
20
10
19
24
15
26
28
18
12
14
17
13

Fig. 294.

The spindle is tapered at the top to about $\frac{7}{16}$" on which the cap 34 rests. 4 is the close fitting shell with which is compounded the whorl F. The small pegs on which the bobbin Q is fixed are shown at G. H is a metal washer on which the base of the whorl rests and rotates, I is a circular sponge or wad saturated with oil and let into the lifter plate 7. Innumerable designs have been made and patented to provide improved forms of washers and methods of lubrication but which cannot be considered here for lack of space. The secret of efficiency in running most machines is perfect lubrication. Unless the tubes are kept thoroughly clean and well oiled, the best bearing will yield indifferent results, also all mechanical or other advantages may be neutralised by using unsuitable oils. In the old methods the chief difficulty experienced was to find a ready and effective means of supplying the oil to the sponge. Newer methods have designed and adopted improved washers which facilitate the conduction of oil through them to the base of the whorl and tube.

83. Ballooning. The rotation of the yarn around the cap forms a curve, technically denominated "*balloon.*" The extent of the tendency to balloon is governed by several factors. (1) The tension created by the bobbin, (2) the friction generated between the yarn and the cap, (3) the weight or thickness of the yarn itself, (4) the speed at which it rotates, and (5) the size of the cap used.

Tins are placed midway between the contiguous spindles to prevent the threads from interfering with

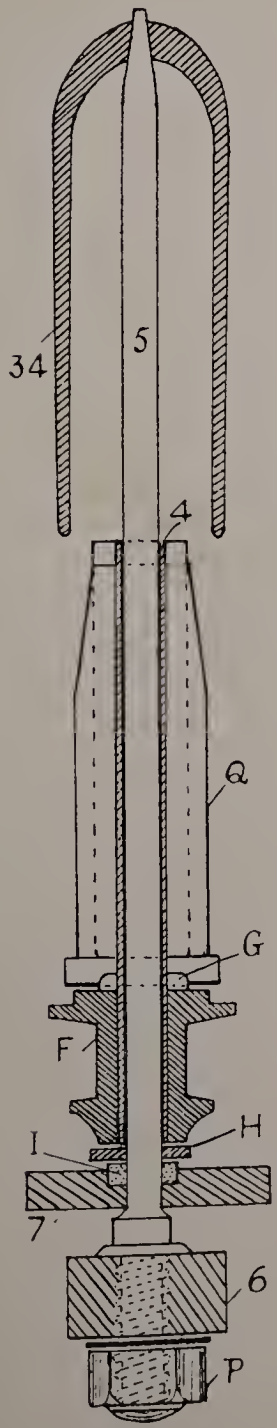

Fig. 295.

each other. Consequently the threads are continually beating against the tins which results in loosening the fibres and producing a wild scraggy appearance on the surface of the yarn.

It is extremely difficult to perfectly control the balloon, because it varies during the building of the bobbin and even in the same traverse where spools are being filled. The extent of the balloon can be primarily reduced by an increase in the tension on the yarn and this should be varied according to the weight or size of the yarn. The tension increases pro-rata to the square of the speed of the bobbin and vice versa, and in proportion to the size of the cap.

Experience and judgment only will determine the means of adjustment.

84. Ring Spinning. The spindles in ring spinning are short in length and constructed on the Rabbeth pattern. Each spindle is supported and free to rotate in a steel tube which, in turn, is suspended and supported from the shoulder of a steel bolster cup, divisible into two parts and which, when compounded is charged with a suitable lubricant and forms a reservoir for the spindle, which takes up a constant supply of the oil.

The bolster cup is bolted fast to the fixed spindle rail.

The whorl is compounded with the spindle on which the bobbin is temporarily fixed, and rotates in sympathy. The yarn is directed on to the bobbin through the medium of a small steel traveller, supported and free to rotate around a steel ring compounded with the lifter

plate and circumscribing the spindle. The yarn is attached to the bobbin which, during its rotation, drags the traveller after it, by which means the yarn is incidentally tensioned, and consequently the heavier the traveller the greater the drag and tension on the yarn. Travellers are therefore graded in weight for different counts of yarn. Tension is however, also imparted to the yarn through the resistance of the air to the speed of the gyrating thread.

This resistance is subject to two distinct modifications. (a) The speed of the traveller and spindle—the greater the speed, the greater the air resistance. (b) The ever varying distance between the ring traveller and the eye of the wire board—the greater the difference, the greater the drag.

85. Ring Spinning Frame.

Fig. 296 is an elevation in section of part of a ring spinning frame as made by Prince Smith & Sons, for spinning from rove prepared from dry combed Botany tops. It illustrates the essential parts of the machine and the direction of the traverse of the rove from its bobbin, to the spool compounded with the ring spindle. 1 is the roving bobbin, 2 the rove, 3 a guide rod over which the rove passes to the twizzle ring guide 4 from whence it passes to and through the nip of the back rollers 5, three pairs of carriers 6 and the front rollers 7. The drawn thread then passes in contact with a damping roller 8, to and through the eye of the top or wire board 9, to and under the ring traveller 10, and the spool or bobbin 11 where it is fastened.

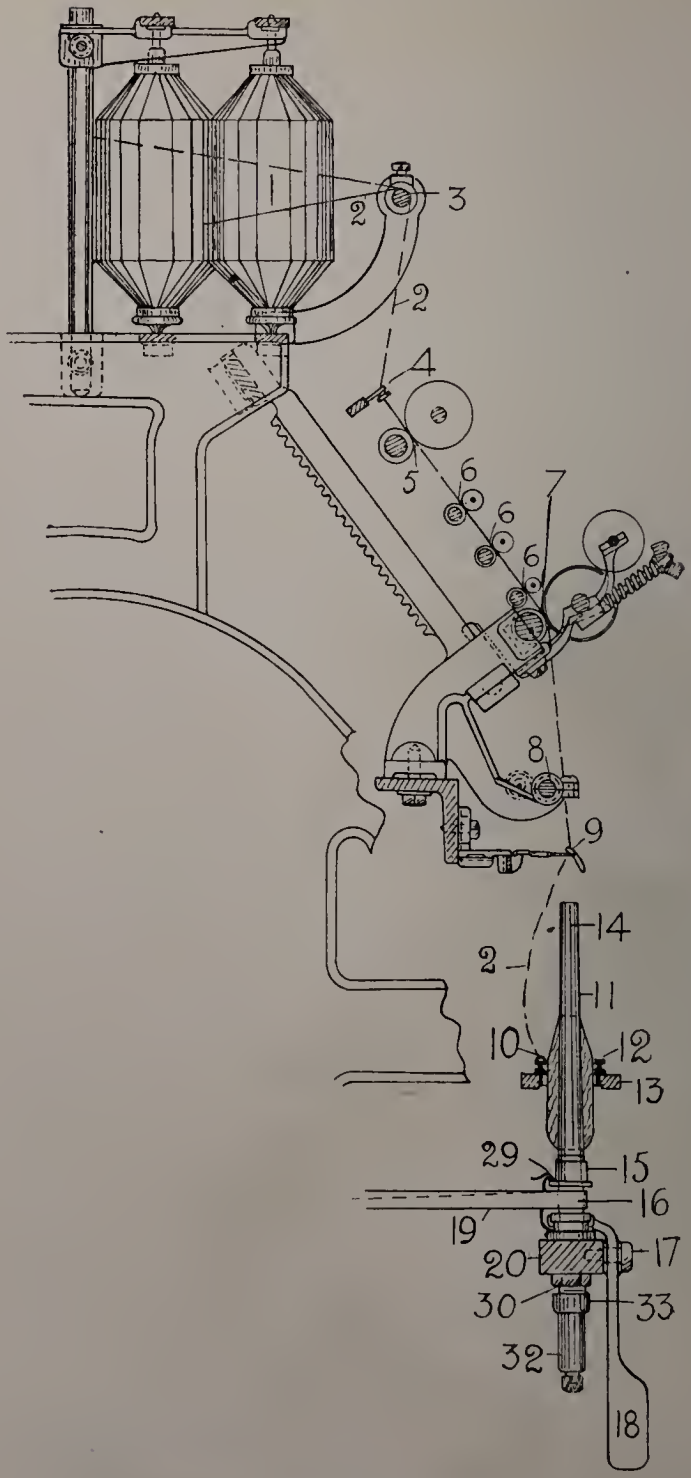

Fig. 296.

The ring traveller 10 is freely mounted on a flanged ring forming the upper part of a steel ring 12, which is compounded with the builder 13 and with which it reciprocates in a vertical plane, parallel to the spindle 14. The base of the bobbin 11 is recessed so as to fit on two small pegs 21, forming part of the solid or boss part 15 of the whorl 16. The base of the whorl is constructed with inner and outer walls (see 28, Fig. 299) but the boss of the whorl is sweated fast to the spindle 14. A portion of the usual driving tape is shewn at 19. The spindle and its adjuncts are fixed to the spindle rail 20 which is as usual permanently fixed between the machine gables. The spindle and bobbin are free to rotate in a fixed plate. The yarn is distributed over the bobbin by the reciprocating and gradually ascending lifter plate 13, ring 12 and traveller 10.

86. Construction Details of Ring Spindle.

Fig. 297 shows, in sectional elevation, a complete spindle, and its adjuncts, as detached from its bearings in the frame.

The spindle is composed of several important parts, as shown, each of which is detached from its usual connections and may be described as follows.

Fig. 298 shows the unit and bare spindle 14 with which is permanently compounded a whorl 16. Whorl boss 15 and two small projecting teeth 21 on which the recessed part at the base of the bobbin 11 is fixed. The inner wall or rim in the whorl 16 is shown at 28. A spiral spring 22 is made fast to the spindle near its base as shown. Its function is to cause the lubricant to flow from the reservoir.

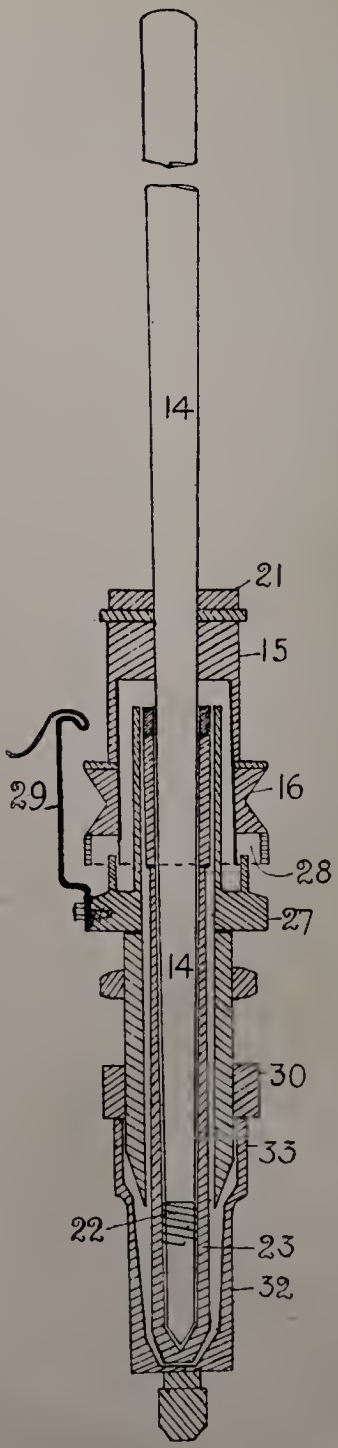

Fig. 297.

Fig. 299 consists simply of a steel tube 23 constructed as follows :—A small hole 24 is made in the wall of the tube about one inch from its base as shown, and through which any suitable lubricant can be drawn, by the rotating spiral spring 22 attached to the spindle 14, when the parts are assembled and in operation. At the top of the tube wall 23, four projecting teeth 25 are formed—see plan. These are designed to fit into recessed parts formed in the bolster tube.

Fig. 300 is a steel bolster tube 26, with which is compounded a steel cup 27 into which the inner ring 28 of the whorl 16 normally fits and is free to rotate. The base of the cup 27 forms a boss and is sweated on to the bolster tube 26. A steel spring 29 is set screwed as shown to the boss of 27. The hook at the top of spring 29 normally projects immediately above the upper surface of the whorl, in which position it serves to keep the spindle in its adjusted and normal rotary position. The lower part of the bolster tube is threaded for about two inches and upon which is a threaded adjustable nut 30. When the nut is removed, the bolster tube may be placed into the spindle rail 20, Fig. 296, until the boss 27 rests on the surface of the spindle rail. The nut 30 is then replaced to tighten the tube 26 fast to the spindle rail. At the top of tube 26 four notches are cut equidistant into which the four teeth 25 in tube 23 exactly fit and by which means the steel tube 23 and the bolster tube 26 are compounded.

Fig. 301 is a steel cup 32 constructed with an internally threaded shoulder 33 and by which means it may be screwed tight on to the threaded part of the bolster

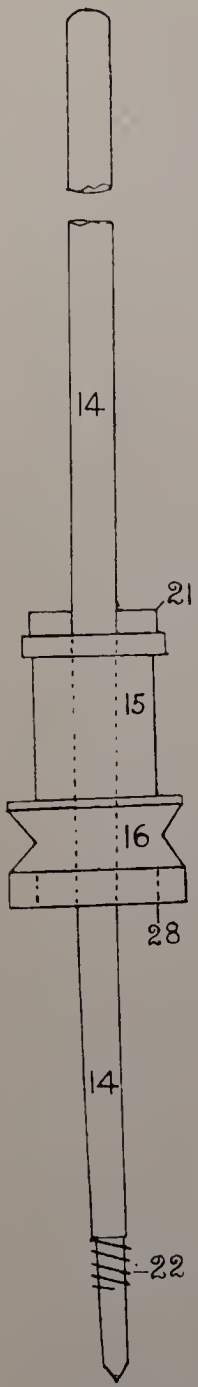

Fig. 298

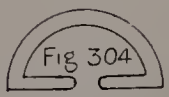

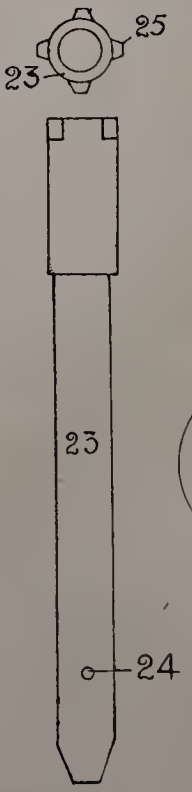

Fig. 299

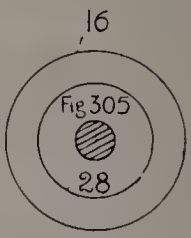

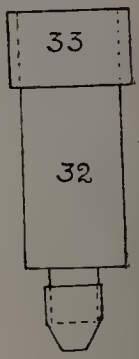

Fig 301

Fig 300

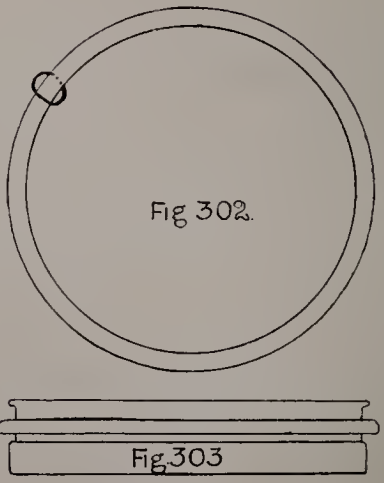

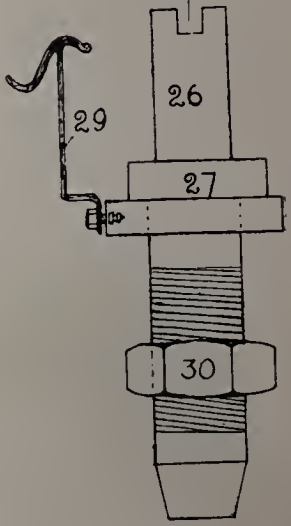

Figs 298 to 305.

tube 26. The design and object of this cup is to serve as a receptacle for oil and from which the spindle 14 may be continuously lubricated. The assembling of the foregoing parts constitutes the complete spindle.

Fig. 302 shows in detached form a plan of a ring and

Fig. 303 an elevation of same.

Fig. 304 is an illustration of a ring traveller.

Fig. 305 is a view of the whorl as seen from the under-side.

87. Tension on tapes driving the Spindles. The introduction of tension devices on the bands or tapes which drive the spindles, in Throstle spinning, twisting, or the roving boxes in the Drawing, is designed for the purpose of imparting a uniform tension on the tapes and a constant drive to the whorl on the spindle or tube irrespective of its relative position to the centre of the driving cylinder as e.g. in cap spinning where the whorl with its tube is supported and reciprocated by the lifter plate in a vertical plane, the driving band is gradually tightened every time the whorl passes its normal or central and theoretical position. The result of this is a constant varying speed to the whorl and amount of twist to the yarn. Incidentally the tension pulleys not only contribute to the life of the tapes but also tend to produce a more uniform twist in the yarn.

Figs. 306 and 307 shew in elevation and plan respectively the usual method of driving four spindles—two on each side of the spinning frame, together with the tension pulley and method of supporting and weighting it.

1 is the frame or " tin " cylinder, 2 the driving tapes, 3 the tension pulley, 4, 5, 6 and 7, the spindles in their order of driving from the cylinder. The axle 8 of the tension pulley 3 is supported and free to rotate in

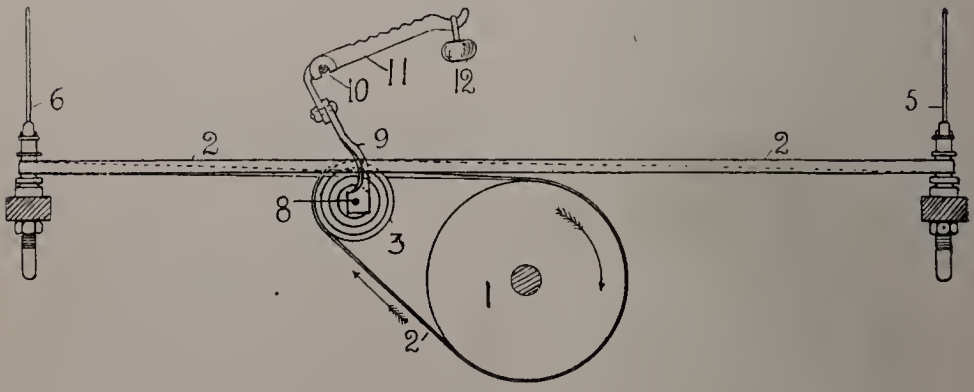

Fig. 306.

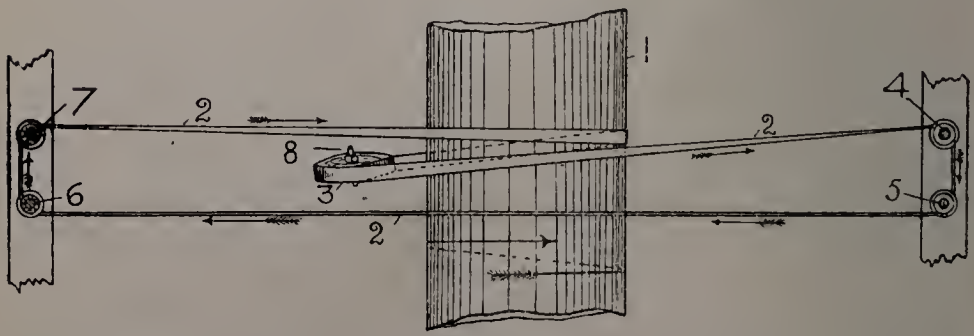

Fig. 307.

suitable bearings in the depending lever arm 9 of the " bell " crank lever pivoted on a fixed stud 10. The horizontal lever arm 11 of the bell crank lever carries an adjustable weight 12. The arrows indicate the direction of rotation.

Figs. 308 and 309 show in elevation and plan respectively the design and arrangement for driving two

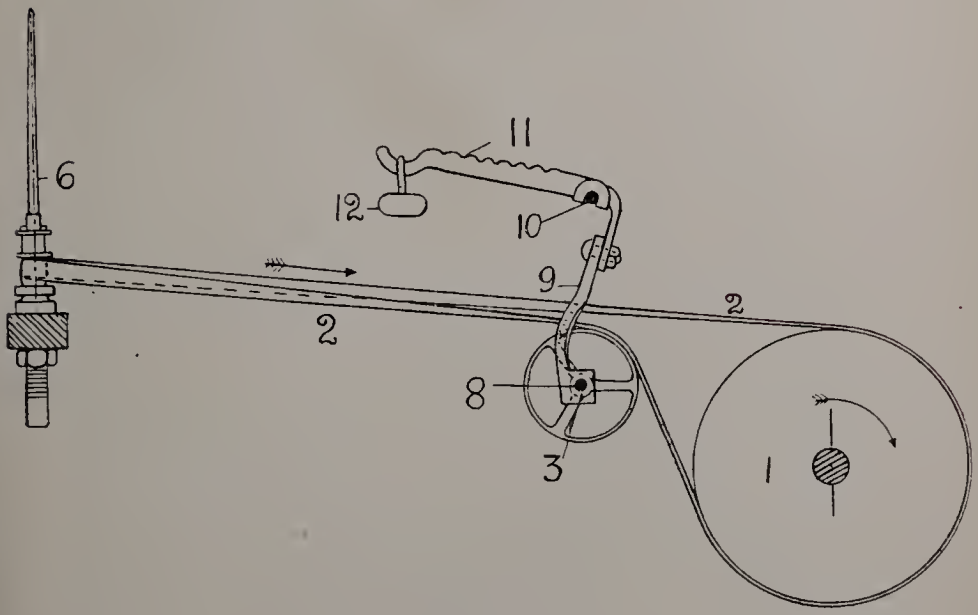

Fig. 308.

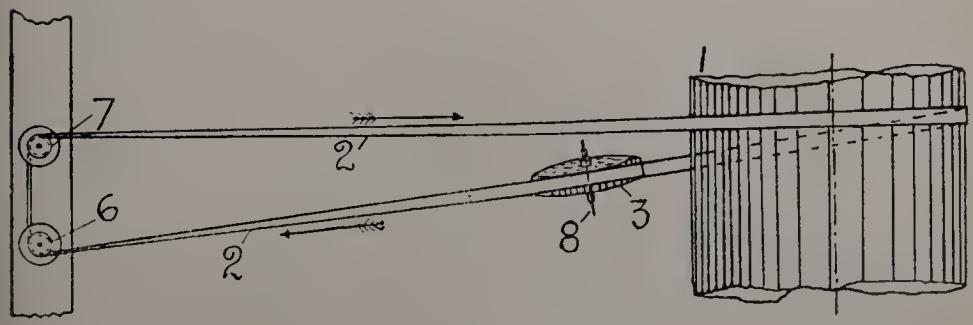

Fig. 309.

spindles only, for a single spinning frame. The same numerals refer to corresponding details as in Figs. 306 and 307.

The advantage of the tension device is manifest. Any momentary excessive tension on the driving tape is absorbed or neutralised by the immediate yielding of the tension pulley 8 which adapts itself to the varying lengths of tape required by the position of the spindle or from any other cause, e.g. slack tapes.

88. Twist gearing on Spinning Frame. Figs. 310 and 311 show in elevation and plan respectively a modern arrangement for driving the twist gearing and front rollers of a Throstle spinning frame. A is the cylinder shaft, B the fast and loose pulleys on same, C and C^1 sprocket chain wheels compounded with the shaft A. D and D^1 sprocket chains which convey rotary motion to the sprocket wheels E and E^1 mounted on adjustable studs F and F^1 respectively. Compounded with the stud F is a second sprocket wheel G which conveys, through a sprocket chain H, rotary motion to the sprocket I on adjustable stud J. Compounded with the sprocket wheel I is the twist change pinion spur wheel K, the teeth of which intermesh with and drive the front roller L.

Reverting to the left side of the machine a spur change wheel M is mounted on the stud F^1 and drives a stud wheel N on stud O. Compounded with the stud wheel N is a spur pinion P the teeth of which intermesh with and drive the front roller wheel L^1.

Example I. Given the following details of mechanism which regulate the twist, find the *gauge point* or standard number, which when divided by the required amount of twist will give the change wheel (a) for the right side

and (b) for the left side of the machine. (Figs. 310 and 311).

Fig. 310.

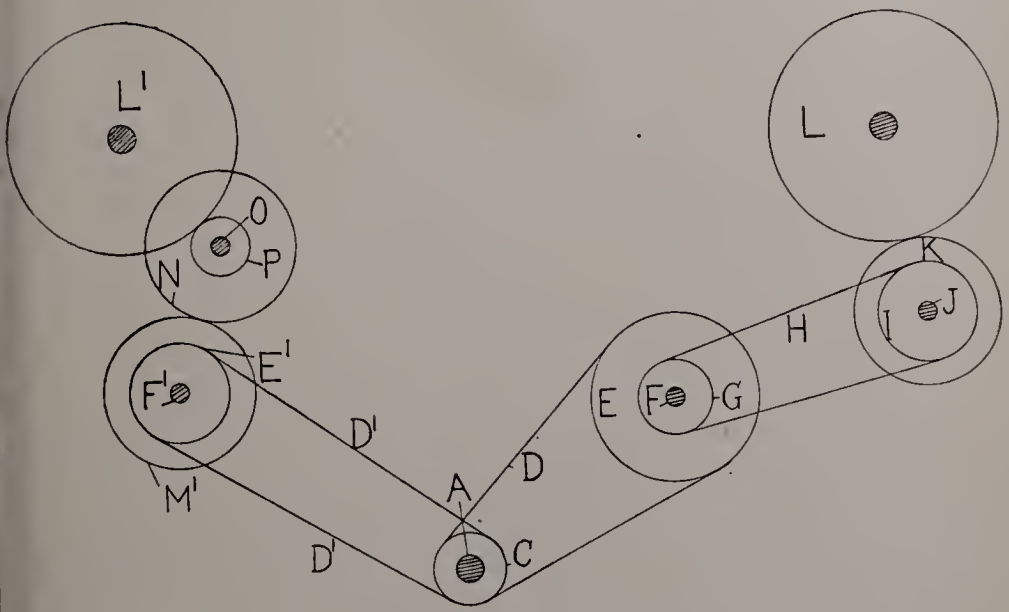

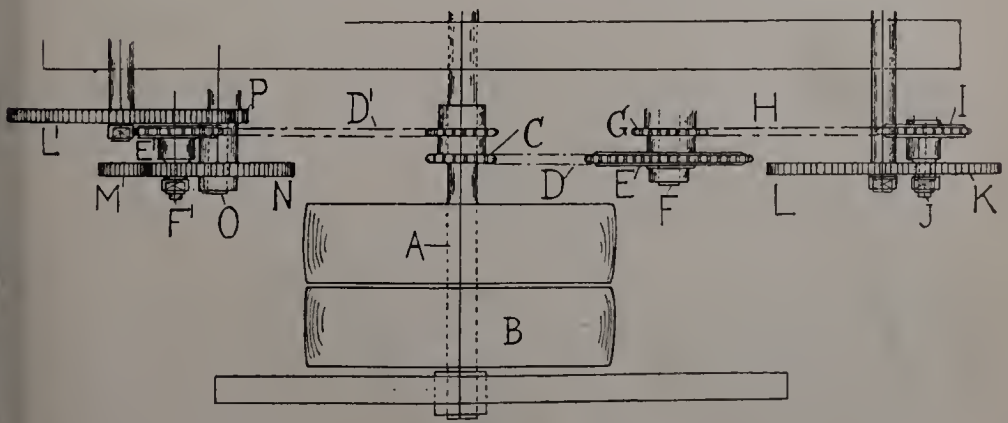

Fig. 311.

(a) Right side of frame and diagram—

Diameter of front roller	=	3 inches
Diameter of tin cylinder	=	10 inches
Diameter of whorl on spindle	=	1 inch
C, Sprocket driving wheel	=	19 teeth
E, ,, stud wheel	=	35 ,,
G, ,, ,, pinion	=	14 ,,
I, ,, ,, wheel	=	20 ,,
K, spur pinion, change wheel	=	
L, spur wheel on front roller	=	150 teeth

(b) Left side of frame and diagram—

Diameter of front roller	=	3 inches
Diameter of tin cylinder	=	10 inches
Diameter of whorl on spindle	=	1 inch
C, sprocket driving wheel	=	19 teeth
E^1, ,, stud wheel	=	20 ,,
M, spur change wheel	=	
N, ,, stud wheel	=	100 teeth
P, ,, ,, pinion	=	40 ,,
L^1, spur wheel on front roller	=	150 ,,

In the solution of these and such like problems, the factors, which if increased, would produce a greater amount of twist are placed in the numerator and those, which if increased, would yield less draft are placed in the denominator, e.g. Any increase, in the size of the driven front roller wheel, would produce *less* speed to the front roller and *more* twist, whereas any increase in the diameter of the driven whorl, would produce *more* speed in the spindle and *more* twist also.

SOLUTIONS (a) and (b)—

Gauge point for twist gearing.

$$\text{(a) } \frac{\text{More}}{\text{Less}} = \frac{35}{19}_{E} \times \frac{20}{14}_{I} \times \frac{150}{CW}_{L} \times \frac{7}{3 \times 22}_{\text{Circe. of front roller.}} \times \frac{10}{1}_{\text{Cylinder Whorl}} = 419.$$

$$\text{(b) } \frac{\text{More}}{\text{Less}} = \frac{19}{20}_{C} \times \frac{100}{CW}_{G} \times \frac{150}{40}_{L^1} \times \frac{7}{3 \times 22}_{N} \times \frac{10}{1}_{P} = 419.$$

EXAMPLE 2. Required a yarn with $8\frac{1}{4}$ turns per inch. Find change wheel for the G.P. 419 as above.

SOLUTION.

Then, Change Wheel $= 419 \div 8\frac{1}{4} = 51$.

EXAMPLE 3. If the following particulars are given for the cap frame (Fig. 293) find (a) the number of turns per inch and (b) the gauge point—Diameter of cylinder (3) 10 inches, diameter of whorl (4) 1 inch, diameter of front roller (15) 4 inches, change wheel (11) 35 teeth; front roller wheel (13) 268 teeth; diameter of twist pulley (10) 18 inches, diameter of cylinder pulley (8) 8 inches.

SOLUTIONS a and b.

(a) $$\frac{\text{More}}{\text{Less}} = \frac{18}{8} \times \frac{215}{35} \times \frac{7}{4 \times 22} \times \frac{10}{1} = 11.$$

(b) Gauge Point.

$$\frac{\text{More}}{\text{Less}} = \frac{18}{8} \times \frac{215}{CW} \times \frac{7}{4 \times 22} \times \frac{10}{1} = 385.$$

EXAMPLE 4. Find the speed of the spindles, turns per inch, and twist gauge point in a fly spinning frame (Figs. 290 & 291) when the following particulars are given :—

No. in			
Fig. 291	Revolutions of line shaft	=	140
—	Drum on same—Diameter	=	36″
—	Pulley on frame ,,	=	20″
20	Tin cylinder ,,	=	9″
16	Whorl ,,	=	$1\frac{1}{8}$″
22	Spur wheel on cylinder shaft, teeth	=	24
24	Stud wheel ,,	=	60
25	Stud pinion—change wheel ,,	=	48
7	Circumference of front roller	=	$12\frac{1}{2}$″
27	Wheel on front roller—teeth	=	220

Solutions (a), (b) and (c).

(a) Then speed of spindles=

$$\frac{\text{More}}{\text{Less}} = \frac{140}{1} \times \frac{36}{20} \times \frac{9 \times 8}{9} = 2016 \text{ revs.}$$

(b) And turns per inch=

$$\frac{\text{More}}{\text{Less}} = \frac{\overset{(20)}{9 \times 8}}{\underset{(16)}{9}} \times \frac{\overset{(24)}{60}}{\underset{(22)}{24}} \times \frac{\overset{(27)}{220}}{\underset{(25)}{48}} \times \frac{2}{\underset{(7)}{25}} = 7\tfrac{1}{3} \text{ turns}$$

(c) Gauge point=

$$\frac{\text{More}}{\text{Less}} = \frac{9 \times 8}{9} \times \frac{60}{24} \times \frac{220}{\text{CW}} \times \frac{2}{25} = 352$$

Draft Calculation in Throstle Spinning.

Example 5. Find the amount of draft in a fly frame when the following details are given :—

Diameter of front roller	=	4 inches
Diameter of back roller	=	$1\frac{1}{4}$,,
Change wheel	=	49 teeth
Stud wheel	=	100 ,,
Stud pinion (plate wheel)	=	84 ,,
Back roller wheel	=	155 ,,

Solution of draft =

$$\frac{\text{More}}{\text{Less}} = \frac{\text{Dia. of Ft. roller}}{\text{Dia. of Bk. roller}} \times \frac{\text{Stud Wheel}}{\text{Stud pinion}} \times \frac{\text{Bk. roller Wheel}}{\text{Change Wheel}}$$

$$= \frac{4}{1\frac{1}{4}} \times \frac{100}{49} \times \frac{155}{84} = 12 \text{ draft}$$

Example 6. Given the particulars as in example 5. Find the gauge point, which when divided by the change wheel will give the draft in the frame, and conversely if divided by the draft, will give the required change wheel.

Evidently then the product of the change wheel and the draft will produce the gauge points.

Thus :

Gauge point for draft

$= 12 \times 49 = 588$ approx.

or by elimination of the change wheel from the above equation (Example 5) thus :

$$\text{G.P.} = \frac{4}{1\frac{1}{4}} \times \frac{100}{\text{CW}} \times \frac{155}{84} = 590.$$

EXAMPLE 7. Given the G.P. for the draft in a spinning frame as 590, find the change wheel required to produce a draft of $10\frac{1}{2}$.

Then change wheel required=

$$\frac{\text{G.P.}}{\text{Draft}} \quad \frac{590}{10{\cdot}5} = 58 \text{ teeth.}$$

EXAMPLE 8. Given the following particulars of draft gearing in a cap spinning frame (Fig. 294) speed of spindle 6,400 revs. per minute, diameter of front roller 4 ins.; diameter of back roller $1\frac{1}{4}$; number of teeth in change wheel (17) 40; stud wheel (18) 100; stud pinion (19) 84; Back roller wheel (21) 100. Find (a) the draft, and (b) the gauge point.

SOLUTIONS (a) and (b).

(a) Draft in frame=

$$\frac{\text{More}}{\text{Less}} = \frac{(15)}{(22)} \frac{4}{1\frac{1}{4}} \times \frac{(8)}{(17)} \frac{100}{40} \times \frac{(21)}{(19)} \frac{100}{84} = 9\frac{1}{2}$$

(b) Gauge point=

$$\frac{\text{More}}{\text{Less}} = \frac{4}{1\frac{1}{4}} \times \frac{100}{\text{CW}} \times \frac{100}{84} = 380$$

CHAPTER XLV.

LIFTER MECHANISM, SPINNING AND TWISTING.

89. *Builder Motions and Functions.* 90. *Scaife's Builder Mechanism.* 91. *Rotary Mechanism to Scroll and Heart Wheel Shaft.* 92. *Rotary and Reciprocatory action of the combined mechanism.* 93. *Ratio of Speeds of Front Rollers and Scroll Shaft.* 94. *Ratio of Speeds of Scroll and Heart Wheel.* 95. *Usual short method for finding "Lifter" Change Wheels.*

THE object of the Lifter mechanism is to control the winding of the yarn, on bobbins, tubes and spools. A different motion is required for filling each of these.

First.—For filling double-headed or reeling bobbins a reciprocating motion is only required. The length of the traverse is determined by the size (or length) of the bobbin. The length of these bobbins varies from $2\frac{1}{4}$ to $3\frac{1}{2}$ inches. Short bobbins have to be used for fine counts of yarn, in fly spinning because of the amount of drag which necessarily increases as the bobbin becomes fuller.

Second.—For filling the tube, a double motion is required, which consists of a reciprocating and a constantly lowering motion. The object of the latter is to fill the tube over its entire length, whilst the combined motions make it fuller in the middle.

Third.—For filling the spool, which is chiefly used for weft, a triple motion is required. At the commencement of the filling a very short traverse—technically called "pick"—is only necessary. The length of traverse must gradually increase until the bobbin head has been perfectly formed. Afterwards the remaining motion is double as in the case of the tube and the length of the pick is constant until the spool is filled.

89. Builder Motions and Functions.

The Lifter mechanism is one of the most important parts of the spinning frame and is perhaps one of the least understood.

Fig. 312 shows a drawing to scale of double headed bobbin.

Fig. 313 is a drawing to scale of a full tube.

Fig 314 is a drawing to scale of a $5'' \times 1\frac{1}{4}''$ ordinary size full spool, the filling of which involves the application (1) of the uniform reciprocating traverse as required for the double headed bobbin, Fig. 312 ; (2) the reciprocating traverse combined with the gradually falling builder plate as required for the tube, Fig. 313 ; and (3) the variable traverse of the builder plate, combined with the gradual lowering of same together with its uniform reciprocation, as required for the spool, Fig. 314. Hence a study of the builder motions and necessary changes required to fill the spool will incidentally include all the principles of motion involved in filling the double headed bobbin and the tube.

The spool (Fig. 314) is designed to store the weft for weaving and to be subsequently placed in the

weaver's shuttle, where during the actual operation of weaving, it is subjected to sudden throwing and instantaneous arrests which necessarily involve that the yarn must be wound in such a way as to neutralise any tendency of it to slip off the spool in lumps—technically denominated "sloughing." The spool is therefore

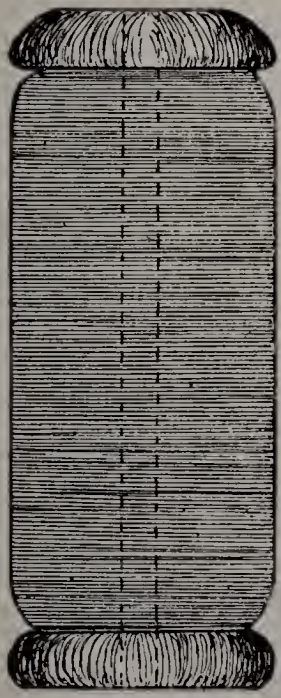

Fig. 312.

Fig. 313.

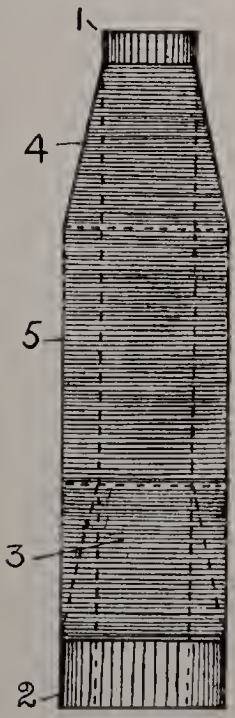

Fig. 314.

built up with a short traverse or pick, upon a gradually lowering builder plate. The operation is divisible into two distinct stages, (1) the formation of the head where the length of the pick—initially short—increases for each amount of distance which the builder plate descends and (2) the uniform length of pick for each further

depression of the level of the plate so as to fill the remainder of the barrel.

In Fig. 314 the barrel of the spool is shown at 1, the flange at 2, the formation of the head at 3, the resultant cone effect at 4 and the body of the completed spool at 5.

90. Scaife's Builder Mechanism.

Fig. 315 shows a front elevation of Scaife's builder mechanism and Figs. 316 and 317 a plan and an end elevation of same respectively. This principle of mechanism is now virtually the only one adopted in practice to accomplish the foregoing objects. Similar numerals in each diagram refer to corresponding details of mechanism.

1 indicates a portion of the machine gable, 2 the builder or lifter plate supported on rods 3. These rods, usually called the "lifter rods," are placed at intervals along the full width or "side" of the frame; they pass freely through the upper and lower bolster rails 4 and 5 and are adjustably fastened near their base terminals by set screws 6, to small pieces of metal 7, technically called "dogs." The builder plate 2, rods 3 and dog 7 are free to reciprocate in a vertical plane. The dog 7 and its duplicates are adjustably fastened by suitable lock nuts to a hooked form of bolt 8 on to which a chain 9 is linked and from whence it passes freely over two anti-friction rollers 10 and 11 to a stud 12 fixed in a horizontal flat rail 13 which may be denominated the chain rail. This rail 13 is supported on the pulley 11 and its duplicates and can freely reciprocate upon the pulleys in a horizontal plane.

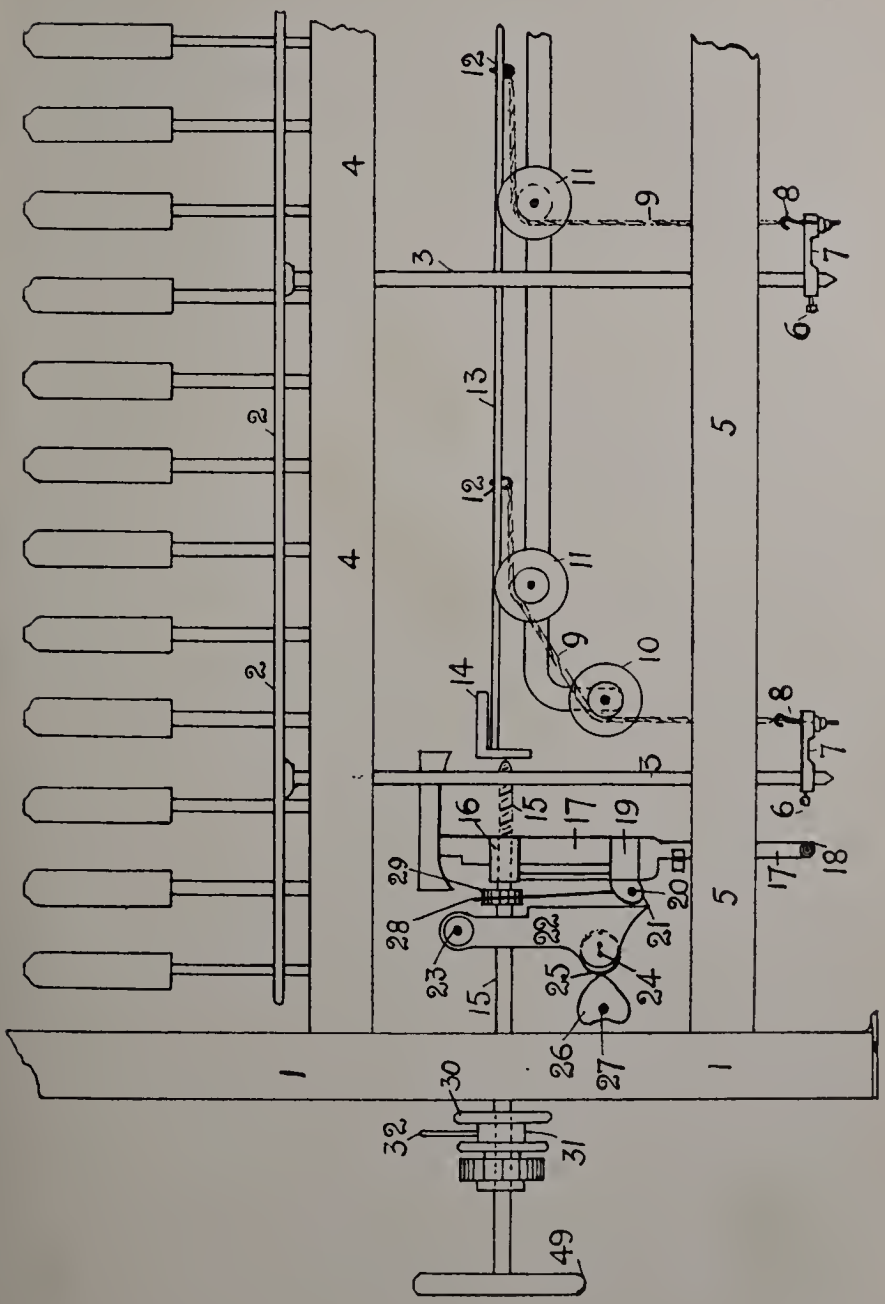
1
2
3
4
5
6
7
8
9
10
11
12
13
14
15
16
17
18
19
20
21
22
23
24
25
26
27
28
29
30
31
32
49

Fig. 315.

A steel right angled bracket 14 is compounded with the left terminal of the chain rail 13 against which the reduced and rounded end of a screw or scroll shaft 15 is kept in constant pressure contact and from which action the rail is reciprocated.

The scroll shaft 15 is suitably supported by brackets to the machine gable, while its free and scroll end is

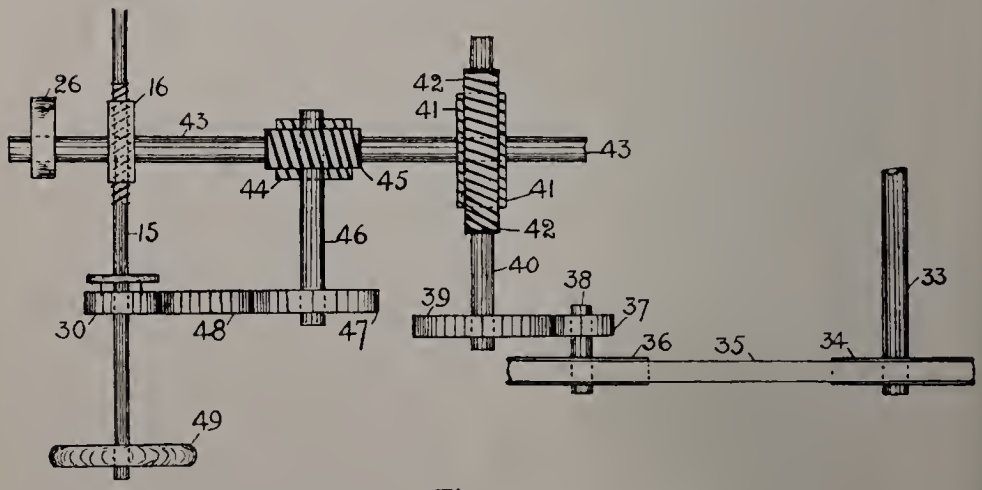

Fig. 316.

passed through an internally threaded nut 16 which is compounded with a long lever 17 pivoted on a fixed stud 18 and about which it is free to oscillate. A steel bracket 19 is mounted upon and fits very closely to the lever 17 but is free to slide upon it. A stud 20 is fixed through one part of the sliding bracket 19 and carries an anti-friction roller 21 which is kept in rolling contact with the face side of a short lever 22 sometimes called the "heart lever." This lever is pivoted on a fixed stud 23 and carries near its free end a stud 24 on which an anti-friction roller 25 is mounted and free to rotate. This

roller 25 is kept in rotary contact with a heart wheel 26 mounted on and compounded with a rotary shaft 27.

Compounded with the slide bracket 19 is a spur toothed vertical rack 28 which is free to reciprocate in a vertical plane and carry with it bracket 19 and stud 20 with bowl 21 either nearer to or remoter from the pivot of the heart lever 22.

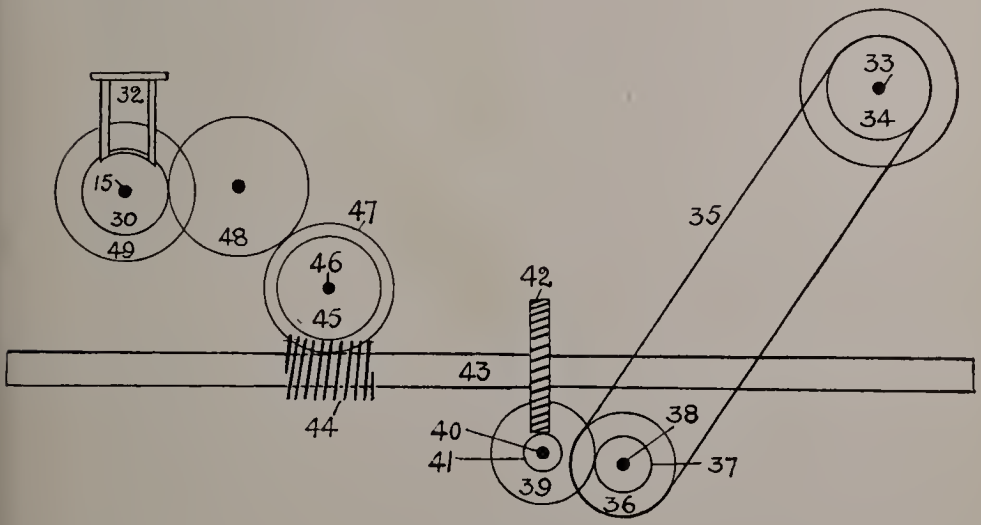

Fig. 317.

This movement may be accomplished, at will, by adjusting the teeth of the rack 28 into gear with the teeth of a small pinion 29 compounded with the free end of the scroll shaft 15.

The pinion 29 contains 13 small teeth and one large "catch" tooth—see detached Fig. 318.

Mounted upon the scroll shaft is a second spur wheel 30 constructed with a "feather" key which normally fits into a groove formed longitudinally in the scroll

shaft 15 Fig. 316. The wheel 30 is therefore free to rotate the scroll shaft 15 or to permit it to reciprocate in a lateral plane independently of, or conjointly with, its rotation.

The boss of wheel 30 is extended and has a circular groove or recess 31 formed in it. Into this recess a small adjustable steel plate 32 may be placed at will and by which means it is free to retain the wheel 30 in its normal position and thereby permit the scroll shaft 15 to freely move inwards or outwards as required.

91. Rotary Mechanism to Scroll and Heart Wheel Shaft.

The details of gearing mechanism which are designed to produce the required rotary motion in the heart wheel and scroll shafts are as follows :—

(Fig. 316) Compounded with the cylinder shaft 33 is a small belt pulley 34 which, through a belt 35, communicates rotary motion to a pulley 36 with which is compounded a change spur pinion 37 both of which are free to rotate on a fixed stud 38. The teeth of the pinion 37 intermesh with and drive a spur wheel 39 which is fast on a stud shaft 40 and with which is compounded a worm 41. Usually this worm is single when fine counts are being spun and double for coarse counts which obviates the necessity of having to run the worm 41 and shaft 40 at too high a speed when thick counts of yarn are required. The worm 41 is geared into and rotates a worm wheel 42, fast on the shaft 43 with which the heart wheel is compounded and for which reason the shaft 43 may be denominated the heart wheel shaft.

The rotation of the scroll shaft 15 is produced by the following train of gears :—

Mounted and fast upon the shaft 43 is a worm 44 the teeth of which intermesh and drive a worm wheel 45, fast on a short shaft 46 with which is also compounded a spur pinion 47.

The shaft 46 is suitably supported and free to rotate and with its rotation the spur pinion 47 drives, through a single intermediate 48, the spur wheel 30 and scroll shaft 15.

Combined with this shaft 15 is a smooth wheel 49 by which means the shaft may be rotated at will by hand.

92. Rotary and Reciprocatory action of the combined Mechanism.

Immediately previous to setting the frame in action with each new set of empty spools, the spur pinion 29 is adjusted by first detaching the scroll wheel 30 and simultaneously drawing the scroll shaft 15 outwards until the teeth of the rack pinion 29 are opposite those in the rack 28, Fig. 318. Then the shaft is rotated by hand until the large tooth in wheel 29, projecting beyond the smaller teeth, is sufficiently advanced to grip the large tooth in the rack 28, afterwhich the smaller teeth intermesh with those in the rack and elevate it with the slide bracket 19 and bowl 21 to the desired and predetermined height.

The continuous rotation of the cylinder shaft 33 drives, through the train of wheels 34 to 42 inclusive, the heart wheel shaft 43 and heart wheel 26.

The rotation of the heart wheel 26 in contact with the antifriction bowl 25 oscillates, about its pivot 23, the heart lever 22 and through it, the bracket 19 with long lever 17 about the stud 18. The free arm of lever 17 compounded with nut 16 with which the scroll shaft 15 is threaded, thereby reciprocates the shaft 15 a distance, sufficient to produce the pick or traverse.

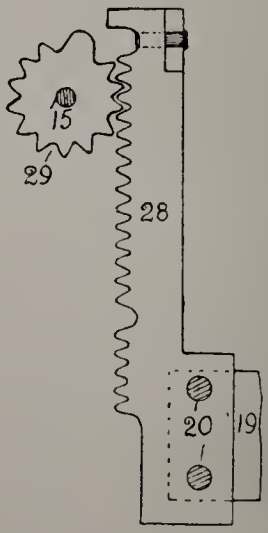

Fig 318

The simultaneous and continuous rotation of the heart wheel shaft 43 produces, through the train of wheels 44, 45, 47 and 30, the required rotary motion in the scroll shaft 15.

Then with each turn of the screw the pressure on the angle bracket 14 and chain rail 13 is gradually withdrawn, but the gravitation load of lifter and its appurtenances gradually falls in sympathy with the retiring scroll shaft.

At first the *pick* traverse is very short, due to the elevated position of the rack 28, but as this gradually descends, the *pick* sympathetically lengthens until the rack spur pinion 29 has completed one revolution during which series of operations the " head " is formed. Then the pinion 29 ceases to have any further influence on the rack and the length of the pick is consequently uniform.

The scroll shaft therefore performs two distinct functions. First, it continuously reciprocates the lifter plate according to the length of the pick required and second, (a) it gradually *lowers* the lifter plate during the period of filling for fly and cap spinning and twisting but (b) gradually elevates the plane of reciprocation of the lifter plate during the period of reciprocation in ring spinning and twisting.

Builder Problems.

Example 1.—Find the lateral traverse of the scroll shaft 15 when the following particulars are known. Stroke of heart wheel 26, 2 inches ; distance of point of contact of heart wheel with the heart wheel lever 22, 9 inches from its fulcrum 23 ; distance of centre of anti-friction bowl 21 from stud 23 and also from fulcrum 18 of the long lever 17 is 9 inches ; length of lever 17, is 15 inches, i.e. the distance which the scroll nut 16 is from the pivot 18.

Solution. Then for each revolution of the heart wheel 26, the levers 22 and 17 must each oscillate a distance of 2″ at their respective points of 9 inches from their respective pivots. The solution of this problem is therefore one of simple proportion :—

$$\text{Traverse of scroll shaft or pick} = \frac{\text{Stroke of Heart Wheel. } 2''}{1} \times \frac{\text{Length of Lever 17. } 15}{9} = 3\tfrac{1}{3} \text{ inches.}$$

N.B.—For double headed bobbins the rack always remains in its lowest position.

EXAMPLE 2. If the centre of the bowl 21 is $8\frac{1}{3}''$ from its fulcrum 18 and 9″ from the pivot 23, the heart wheel with a stroke of the 2 inches is operating on heart wheel 22 at a distance of $8\frac{1}{3}$ inches from its fulcrum ; the nut 16 is 15 inches from the pivot 18 of lever 17, find the *traverse of scroll shaft* 15.

Then the movement of nut 16 is only a question of double proportion.

$$\text{Traverse of scroll shaft } 15 = \frac{2''}{1''} \times \frac{9''}{8\frac{1}{3}''} \times \frac{15''}{8\frac{1}{3}''} = 3\tfrac{2}{3}''$$

When filling the tube, Fig. 313, the length of the pick is constant but considerably shorter than when filling a double headed bobbin. This reduction is obtained by reducing the size of the heart wheel.

EXAMPLE 3. Assume the stroke of the heart wheel is $\frac{3}{4}''$ and that the length of the pick as in example 1 with a heart wheel having a 2″ stroke is $3\frac{1}{3}''$. Find the traverse of scroll shaft 15 or length of pick for the $\frac{3}{4}''$ stroke of heart wheel.

SOLUTION. The difference in length of pick is obviously only one of simple proportion to the ratio of the difference in stroke of the heart wheels, because in this example these are the only factors which are changed.

Then length of traverse of scroll shaft when filling the tube

$$= \frac{3\frac{1}{3}''}{1} \times \frac{\frac{3}{4}''}{2''} = 1\frac{1}{4} \text{ inches.}$$

But as previously stated the lifter rail must continually fall so that the tube may be filled over its entire length. The pitch of the screw on scroll shaft 15 is $\frac{1}{2}''$, therefore the lifter rail will descend this distance for each revolution of the scroll shaft, e.g. If the tube has to be filled over 3″ of its length, then the scroll shaft must necessarily make six revolutions.

EXAMPLE 4. Find the central position of adjustment of slide bracket 19 (on long lever 17) when given the following particulars :—

Stroke of heart wheel 26=2 inches.

Lateral traverse of scroll nut 16=$3\frac{1}{3}$ inches.

Distance of heart wheel 26 from pivot 23=$8\frac{1}{2}$ inches.

Distance of scroll nut 16 from pivot 18=15 inches.

Perpendicular distance between pivots 18 and 23=18 inches. (See diagram, Fig. 319).

SOLUTION.

Let x=the traverse at the central point of bracket 19
and let m= the distance between the central point x and pivot 23,
and let n= the distance between the central point x and pivot 18.

Then the lateral traverse of slide bracket 19 equals stroke of cam 26.

(1) $x = \dfrac{2m}{8\frac{1}{2}''}$ length of cam lever 22.

(2) $x = \dfrac{n \times 3\frac{1}{3}''}{15''}$ traverse of scroll nut 16. length of long lever.

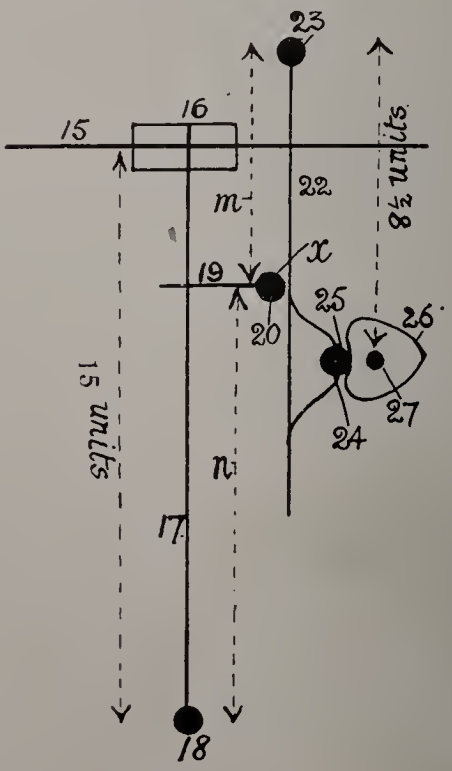

Fig. 319.

$$\therefore \frac{2m}{8\frac{1}{2}} = \frac{3\frac{1}{3}n.}{15.}$$

and $$\frac{m}{n} = \frac{1}{2 \times 15} \times \frac{17}{2} \times \frac{10}{3} = \frac{17}{18}$$

i.e. $m = 17$ units when $n = 18$ units of length.

Then length of $m = \frac{17}{35}$ of 18 $= 8\frac{26}{35}''$

and length of $n = \frac{18}{35}$ of 18 $= 9\frac{9}{35}''$

$\therefore x = 9\frac{9}{35}''$ from pivot 18.

i.e. the centre of adjustment of slide bracket 19 on long lever 17.

PROOF.

Traverse of scroll nut 16 $= \frac{2 \times 17}{8\frac{1}{2}} \times \frac{15}{18} = 3\frac{1}{3}''$

Deduction of formula for any size of cam or traverse of scroll nut.

If o = stroke of heart wheel or cam.
p = distance of cam from its pivot.
q = traverse of scroll nut.
r = distance of scroll nut from its pivot.
s = the combined lengths of m and n.

Then the following formula A will serve for any of the varied dimensions of this type of lifter on the different spinning or twisting frames found in practice.

$$\text{Formula A} = q = \frac{o \times m \times r}{p \times n} = \text{traverse of scroll nut.}$$

EXAMPLE 5. Given a spool of $3\frac{1}{2}$ inches, the length of the pick for which varies from $\frac{7}{16}''$ to $1\frac{5}{16}''$ and the following dimensioned details, find maximum and minimum traverse of scroll shaft and lifter plate.

o. stroke of heart wheel 26 $= \frac{3}{4}''$
p. heart wheel from its pivot 23 $= 9''$.
r. centre of scroll nut from its pivot 18=15″.
m. centre of bracket slide from pivot 23=5″ highest position.
n. centre of bracket slide from pivot 18=12″ highest position.
m. centre of bracket slide from pivot 23=$8\frac{1}{2}''$ lowest position.
n. centre of bracket slide from pivot 18=$8\frac{1}{2}''$ lowest position.

Then maximum traverse of pick or scroll shaft

By Formula A

$$= \frac{3}{4} \times \frac{8\frac{1}{2}}{9} \times \frac{15}{8\frac{1}{2}} = 1\frac{1}{4}''$$

and minimum traverse of the same

By formula A

$$= \frac{3}{4} \times \frac{5}{9} \times \frac{15}{12} = 0{\cdot}52''.$$

It will thus be observed that the train of wheels 34 to 48 causes the small pinion wheel 30 and scroll shaft 15 to gradually rotate, until the small rack pinion eventually evolves from contact with the rack teeth. During this same period the rack slide bracket 19 has been gradually descending and simultaneously gradually increasing the length of the "pick" until the "head" is completely formed which coincides with the evolution of the rack pinion from gear with the rack.

After the completion of the "head" the length of the pick remains constant but the lifter plate continues to fall gradually until the bobbin is full.

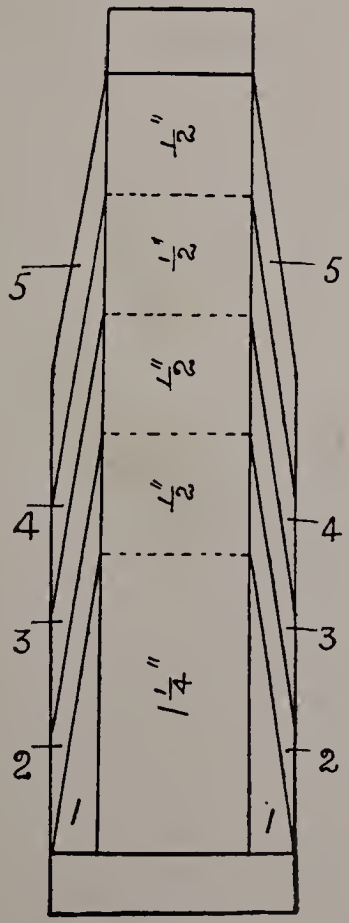

Fig. 320.

93. Ratio of Speeds of Front Rollers and Scroll Shaft.

The "head" is formed during one revolution of the scroll shaft. It is therefore essential to ascertain (1) the number of revolutions which the scroll shaft must make in order to fill any given size of spool or bobbin, (2) the number of revolu-

tions which the heart wheel must make in order to impart the necessary number of lateral traverses of the scroll shaft during each of its revolutions.

These two factors are primarily governed by the size of the yarn and surface speed of the front or delivery rollers.

Two chief sizes of spools are used viz :—

(a) $3\frac{1}{2}'' \times 1''$ flange and $\frac{5}{8}''$ barrel. Fig. 320.
(b) $5'' \times 1\frac{1}{4}''$,, $1''$,, Fig. 321.

The former spool will hold 180 grains and the latter 250 grains weight of yarn—equivalent to 39 and 28 spools per lb. respectively.

If the bobbin capacity of 250 grains weight is divided by 12·5 grains, the weight of one yard of 1s worsted, the quotient will represent the number of yards of yarn which the spool will hold for this count.

Example 6. A $5'' \times 1\frac{1}{4}''$ spool contains yarn which weighs 250 grains, find the length of yarn on a spool for 1s count.

$$\text{Then No. yds. on each spool} = \frac{\text{grs. per spool}}{\text{grs. per yd.}} = \frac{250}{12{\cdot}5} = 20. \quad \text{G.P.}$$

The volume of the yarn varies directly but inversely to the counts of the yarn. (See Chapter XII "Calculations in Yarns and Fabrics"—Bradbury, 1920 Edition).

Therefore the 20 yds. length on the spool for 1s. counts may be used as a gauge point for all other counts.

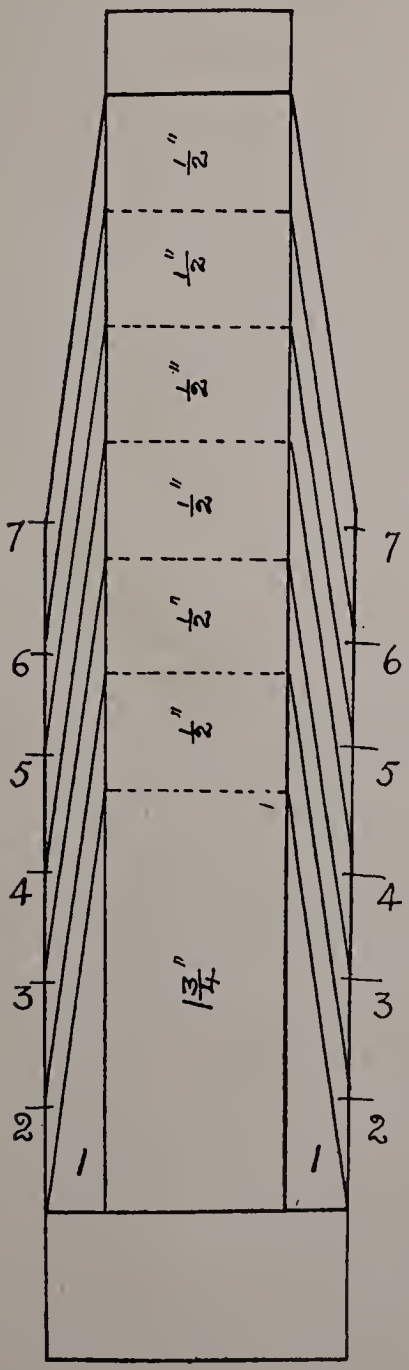

Fig. 321.

EXAMPLE 7. If the counts to be spun are 30s, what length of yarn will a $5'' \times 1\frac{1}{4}''$ spool hold ?

Gauge Point = 20 yds.

$\therefore$ Length of yarn on spool $= 20 \times 30 = 600$ yds.

EXAMPLE 8. Given the lateral traverse or pick of the scroll shaft as $1\frac{1}{4}''$ for a $3\frac{1}{2}''$ spool and $1\frac{3}{4}''$ for a $5''$ spool ; pitch of screw $\frac{1}{2}''$. Find the required number of revolutions which the scroll shaft must make in order to fill (a) the small spool and (b) the large spool.

Then (a)

1st Rev. of screw	= Formation of head	$= 1\frac{1}{4}''$
2nd ,,	,,	$= \frac{1}{2}''$
3rd ,,	,,	$= \frac{1}{2}''$
4th ,,	,,	$= \frac{1}{2}''$
5th ,,	,,	$= \frac{1}{2}''$
5 revs. of screw. (See Fig. 320)		$= 3\frac{1}{4}''$

(b)

1 Rev. of screw	= Formation of heads	$= 1\frac{3}{4}''$
2nd ,,	,,	$= \frac{1}{2}'''$
3rd ,,	,,	$= \frac{1}{2}''$
4th ,,	,,	$= \frac{1}{2}''$
5th ,,	,,	$= \frac{1}{2}''$
6th ,,	,,	$= \frac{1}{2}''$
7th ,,	,,	$= \frac{1}{2}''$
7 Revs. of screw. (See Fig. 321)		$= 4\frac{3}{4}''$

EXAMPLE 9. Assume 7 revolutions of the scroll shaft are required to fill the spool, 1 for the making of the

head and 6 for filling the spool. Find (a) the length of 25s worsted required to form the head and (b) the number of revolutions which a four inch front roller must make to each revolution of the scroll shaft.

SOLUTION (a)

Then $$\text{Length of Yarn per rev. of scroll} = \frac{\text{G.P.} \times \text{Counts}}{\text{Revs. Scroll per head and per pick}} = \frac{20 \times 25s}{7} = 71\tfrac{3}{7} \text{ yds.} = 2570 \text{ inches.}$$

(b) $$\text{Revs of Front roller per rev. of Scroll} = \frac{2570}{1} \div \frac{4 \times 22}{7} = 204{\cdot}5$$

EXAMPLE 10. Assume that it is required to spin 36s worsted on to a $3\frac{1}{2}''$ spool as Fig. 320. The net weight of the yarn on a full spool is 180 grains and 5 revolutions of the scroll shaft are required to fill the spool. The diameter of the front roller is 3″ and the traverse of the scroll is $1\frac{1}{4}''$. Find (a) the length of yarn on the spool for each revolution of the scroll shaft; (b) the number of revolutions of the front roller shaft to each revolution of the scroll.

(a) Then the G.P. for length of yarn per count per spool

$$= \frac{\text{180 grains per spool.}}{12{\cdot}5 \quad ,, \quad \text{15 counts}} = 14{\cdot}4 \text{ yds.}$$

and length of yarn per rev. of scroll

$$= \frac{\text{G.P.} \times \text{Counts}}{\text{Revs. of scroll per spool}} = \frac{14{\cdot}4 \times 36}{5} = 103{\cdot}7 \text{ yds.} = 3733 \text{ inches.}$$

(b) $\frac{\text{Revs. of front rollers}}{\text{per rev. of scroll}} = \frac{3733 \times 7}{3 \times 22} = 396.$

94. Ratio of Speeds of Scroll and Heart Wheel.

The relative number of revolutions of the *heart wheel* to the scroll shaft determines the *angle* of the wrappings of the yarn on the spool. Theoretically the peripheries of these layers should be in close contiguity to each other. It is important to decide in which direction the calculation should be made, e.g. (1) the depth of the flange, to which height the spool is filled or (2) the length of the distance traversed during each revolution of the heart wheel.

It is usual to calculate the number of layers of yarn which can be laid, side by side, along the depth of the filling space. Then the division by this factor into the ascertained diameters of the yarn per inch will give the number of revolutions of heart wheel.

EXAMPLE 11. It is required to spin 36s worsted weft with 10 turns per inch. Given the depth of the flange at the base of the spool as $\frac{3}{16}''$, find the number of revolutions of the heart wheel to each revolution of the scroll shaft. The pitch of the screw is $\frac{1}{2}''$ and the size of the spool $3\frac{1}{2}''$ as Fig. 320.

(a) Then since the average number of diameters of worsted yarns $= \sqrt{\text{counts}} \times 21{\cdot}5$. (See page 236 "Calculations in Yarns and Fabrics."—Bradbury, 1920 Edition).

$\therefore \sqrt{36} \times 21{\cdot}5 = 129$ diameters per inch, the possible layers of yarn in the depth of the spool.

Then the revs. of the heart wheel per revs. of scroll $= 129 \times \frac{3}{16} = 24\frac{3}{16}$.

EXAMPLE 12. If 3733 inches of 36s worsted are put on to the head of a $3\frac{1}{2}$ inch spool (as in example 10) and $24\frac{3}{16}$ revolutions are made by the heart wheel per revolution of the scroll (as in example 11), find the number of revolutions which a 3 inch front roller must make in the same unit of time.

Then revolutions of the front roller

$$= \frac{3733'' \text{ of yarn on ''head'' of spool}}{\frac{3 \times 22}{7} \text{ Circumference of front roller}} = \frac{3733 \times 7}{3 \times 22} = 396.$$

EXAMPLE 13. Given 396 revolutions of the front roller and $24\frac{3}{16}$ revolutions of the heart wheel as the respective numbers which are necessary to produce 3733 inches of yarn on the "head" of the spool during one revolution of the scroll shaft. If the yarn contains 10 turns per inch, find (a) the time required to produce the foregoing, also supply (b) the change wheel for twist and speed of the front roller, (c) heart wheel and (d) scroll shaft respectively when the gearing and driving details and known speeds of frame shaft are as follows :—

Dia. front roller (7)	Fig. 291	= 3 inches
Front roller wheel (27)	Fig. ,,	= 180 teeth
Twist change wheel (25)	Fig. ,,	= x ,,
Stud wheel (24)	Fig. ,,	= 66 ,,
Pinion on cylinder (22)	Fig. ,,	= 25 ,,

Revs. of cylinder shaft (21) per min.

Fig. 291 = 250

Dia. of cylinder (20)	Fig. 291	=	10 inches
,, whorl (16)	Fig. ,,	=	1 inch
,, cylinder pulley 34	Fig. 317	=	4 inches
,, lifter pulley 36	Fig. ,,	=	$7\frac{1}{2}$,,
Lifter motion *change* spur wheel 37	Fig. 317	=	y teeth
Stud wheel 39	Fig. ,,	=	100 ,,
Worm 41	Fig. 316	=	single
,, wheel 42	Fig. ,,	=	40 teeth
,, 44	Fig. ,,	=	single
Scroll change wheel 47	Fig. ,,	=	z teeth
Spur wheel on scroll shaft 50	,, ,,		

SOLUTIONS.

(b) Let x=the twist *change* wheel

Cyl. Stud Wheel Front roller wheel

Then $\frac{10''}{1''} \times \frac{66}{25} \times \frac{180}{x} \times \frac{7}{3 \times 22} =$ 10 turns per in. as given.

Whorl Stud Pinion Change Wheel Circe. of front roller

$$\therefore x = \frac{10 \times 66 \times 180 \times 7}{10 \times 25 \times 3 \times 22} = 50{\cdot}4 \text{ teeth, say } 50.$$

The revs. of front roller per minute

$$= \frac{250 \times 25}{66} \times \frac{50}{180} = 26{\cdot}3.$$

(a) Time required to form the head of the spool

$$= \frac{396 \text{ revs. front roller per rev. scroll shaft}}{26{\cdot}3 \quad ,, \quad ,, \quad \text{per minute}} = 15'\ 4'' \text{ say } 15 \text{ mins.}$$

(c) The revs. of heart wheel per minute

$$= \frac{24\frac{3}{16} \text{ revs. during formation of the "head"}}{15 \text{ min. } 4 \text{ sec. time required to form the "head"}} = 1{\cdot}6.$$

Let y=the change wheel required for lifter motion.

Then $\frac{250}{1} \times \frac{4}{7\frac{1}{2}} \times \frac{y}{100} \times \frac{1}{62} =$ 1·6 revs of heart wheel.

$$\therefore \; y = \frac{15}{2} \times \frac{100}{250} \times \frac{62}{4} \times 1{\cdot}6 = 74{\cdot}4 \text{ teeth.}$$

say 74 teeth.

N.B. If the single worm (41) is changed for a double worm, then the above change wheel would have to be replaced by a wheel containing 37 teeth and the worm would then necessarily rotate at half the speed.

(d) Revs. of scroll shaft per minute

$$= \frac{1 \text{ rev. of scroll shaft to form the "head"}}{15' \text{ time required to form the "head"}}, \quad \frac{1}{15}$$

Let z=change wheel required to produce $\frac{1}{15}$ of a revolution of scroll shaft per min.

Revs. Heart Wheel.		Worm on Heart Wheel Shaft.		Change Wheel for Scroll Shaft.		
Then $\frac{1{\cdot}6}{1}$	×	$\frac{1}{40}$	×	$\frac{z}{40}$	=	$\frac{1}{15}$

$$\therefore \; z = \frac{4{\cdot}0 \times 40 \times 1}{1{\cdot}6 \times 15} = 66 \text{ teeth in change wheel.}$$

95. Usual short method for finding "Lifter" Change Wheels.

When the most suitable relation of speeds and change wheels have been ascertained for any given count or size of yarn, either theoretically or practically the following well known formula will serve to readily find the required change wheels for

different counts of yarn and twists in same where the changes are small. Wide variations in the yarn counts should be considered fundamentally either by experiment and observation or as theoretically described.

Required change wheel for lifter motion

$$= \frac{\text{given counts} \times \text{New twist wheel} \times \text{given motion wheel.}}{\text{Required counts} \times \text{given twist wheel.}}$$

The new twist wheel will, as usual, vary directly as the turns per inch put into the yarn.

EXAMPLE 14. Given a double-headed bobbin $3\frac{1}{4}''$ by $1\frac{15}{16}''$ diameter over all and $\frac{13}{16}''$ diameter of barrel. Calculate the length of 1s worsted that would be required to fill this spool. This number to be used as a gauge point for all other worsted yarn counts for the above size of bobbin and type of spun thread.

CASE 1. Then volume of filling space on bobbin

$$= \text{Length} \times \pi\,(R^2 - r^2) \text{ inches}$$

$$= 3\tfrac{1}{4} \times \pi \left[\left(\frac{31}{32}\right)^2 - \left(\frac{13}{32}\right)^2\right]$$

$$= 3\tfrac{1}{4} \times \pi \left(\frac{792}{1024}\right) \text{ cub. in.}$$

Where R = radius of bobbin flange
and r = ,, ,, barrel.

CASE 2. Then volume of yarn required to fill the bobbin.

$x\ \pi\ r^2$, where x equals length of the yarn required to fill the bobbin
and r = the radius of the yarn.*

* See also page 324 "Calculations in Yarns and Fabrics," 1920 Edition.—Bradbury.

Then No. of diameters per inch of 1s. worsted

$$= 21{\cdot}6 \sqrt{\text{counts}} = 21{\cdot}6 \times 1.$$

$$\therefore \text{ diameter of each thread } = \frac{1''}{21{\cdot}6}$$

$$\text{and radius } = \frac{1}{21{\cdot}6} \times \frac{1}{2} = \frac{1}{43{\cdot}2} \text{ inches.}$$

Then volume of yarn required to fill the bobbin.

$$x\ \pi\ \left(\frac{1}{43{\cdot}2} \times \frac{1}{43{\cdot}2} \right) \text{ cub. ins.}$$

and therefore case 2 equals case 1, thus,

$$x\ \pi\ \left(\frac{1}{43{\cdot}2} \times \frac{1}{43{\cdot}2} \right) = 3\tfrac{1}{4}\ \pi\ \frac{792}{1024}$$

$$\therefore\ x = 3\tfrac{1}{4} \times \frac{\pi}{1} \left(\frac{792}{1024} \right) \times \frac{1}{\pi} \left(\frac{43{\cdot}2 \times 43{\cdot}2}{1 \times 1} \right)$$

$$\therefore\ x = \frac{13}{4} \times \frac{792}{1024} \times \frac{43{\cdot}2}{1} \times \frac{43{\cdot}2}{1} = 4691 \text{ in.} = 130 \text{ yds.}$$

CHAPTER XLVI.

WORSTED YARN CALCULATIONS.

96. *Worsted "Counts" of Yarn.* 97. *Continental Counts.* 98. *Yorkshire Skeins—Woollens.* 99. *Weight and Draft of Rove.* 100. *Productive Problems.*

AT this juncture it is opportune and essential to consider the method of designating the different sizes of worsted yarns, and, for purposes of comparison, the Continental and one chief Woollen System are given.

96. English Worsted "Counts" of Yarn. In all English speaking countries worsted yarn is calculated as follows :—

Circumference of reel	= 36 ins.=1 Thread.
80 Threads or revs. of reel	= 80 yds.=Rap or Lea.
7 Raps or Leas	=560 yds.=1 Hank.

The number of such hanks of 560 yds which weigh 1 lb. avoirdupois is designated the counts.

The term 'hank' is but a figure, for the material may either be in the form of weft on spools and bobbins or warp in the ball or on the warp-beam, and not necessarily made into hanks of 560 yards length. Therefore, if the length of a given weight be known it will be obvious that whether the yarn be made into hanks or in any other form it can readily be reduced to the form of 'counts' or lengths of 560 yards which weigh 1 lb.

97. Continental Counts. This method is based upon the number of unit lengths of 1000 metres each, which weighs 1 kilogramme, *e.g.*,

10's counts = 10 × 1000 metres = 10,000 metres per kilo.
16's ,, = 16 × 1000 ,, = 16,000 ,,
1 metre = 1·094 yards.
1 kilogramme = 2·205 lbs. = 15,432 grains.

Owing to the inconvenience of readily converting Continental into English counts and *vice versa*, by having to compare metres with yards and kilogrammes with lbs., the following formulæ are deduced, which will be found of practical advantage.

Example 1. Find the decimal formula for converting Continental worsted counts into English worsted counts and *vice versa*.

1s French or Continental worsted counts

$$= \frac{1094 \text{ yds. per } 1000 \text{ metres}}{2{\cdot}205 \text{ lbs. per kilogramme}} = 496 \text{ yards per lb.},$$

and basis of English counts = 560 yards per lb. for 1s counts.

$$\therefore \frac{496}{560} = 0{\cdot}885 \text{ (nearest third decimal place).}$$

Obviously then the English unit count is finer than that of the Continental, since 560 yards of the former weigh 1 lb. to each 496 yards of the latter.

∴ 0·885 English = 1s Continental counts.

Numerically the English worsted equivalent will always be less than its Continental contemporary thus :—

Then 0·885s English is equal to 1s Continental counts, or 0·885 times Continental counts equals English counts, and English counts divided by 0·885 equals Continental counts.

FORMULA A.

(a) English counts ÷ 0·885 = Continental worsted.
(b) Continental worsted × 0·885 = English counts.

NOTE.—0·9 is a convenient number for mental calculation on the Exchange, and sufficiently accurate for practical work.

EXAMPLE 2. 36s English equals

$36 \div 0{\cdot}9 = 40$s Continental approximately,
or $36 \div {\cdot}885 = 40{\cdot}7$s Continental actually.

As an *alternative* plan to the foregoing, the following method may be adopted which in some instances will be found simpler than by using 0·885 either as a multiplier or a divisor.

$$\frac{560 \text{ yards English hank}}{496 \text{ yards Continental hank}} = \frac{1{\cdot}13}{1}$$

FORMULA B.

(a) English counts × 1·13 = Continental.
(b) Continental counts ÷ 1·13 = English.

EXAMPLE 3. Convert 36s English worsted by Formula B into Continental counts.

Then 36 English × 1·13 = 40·68 Continental.

98. Yorkshire Skeins—Woollens. This system is based upon the number of skeins of 1,536 yards each, in one 'warten' (6 lb.,) or when reduced, for convenience, it represents 256 yards per skein per lb.

for 1s count. By a further reduction of the above terms it will be noted that the number of yards which weighs 1 dram also equals the count, since 256 drams make 1 lb.

99. Weight and Draft of Rove. The weight of worsted rove is usually designated in drams per 40 yards or 80 yards. The amount of draft is chiefly determined by the length of staple, consequently the weight to which the roving must be made will depend upon the length of fibre and counts of yarn required. It is usual to draft under the length of staple.

The solution of any problem involving the weight of rove, *draft* and count of yarn may be readily ascertained as follows :--

EXAMPLE 1. Assume that 40 yds. be selected as the unit length against which the rove is weighed and expressed in drams. Find its weight in drams for 1s count worsted.

SOLUTION.

Weight in drams per 40 yds. of 1s worsted

$$= \underbrace{\frac{40}{560}}_{\substack{\text{Length of rove} \\ \text{yds. per hank}}} \times \underbrace{\frac{256}{1}}_{\substack{\text{Drs. per lbs.} \\ \text{Counts of yarn}}} = 18{\cdot}3 \text{ drams.}$$

This number may be and is invariably used as a standard or gauge point for determining the counts, draft or weight of roving required when only one of these three factors is unknown.

EXAMPLE 2. Assume the worsted rove is weighed against 80 yds. Find the weight in drams for 80 yds. of 1s. Count.

$$\text{Then} \quad \frac{80}{560} \times \frac{256}{1} = 36{\cdot}6 \text{ drams.}$$

EXAMPLE 3. Given 50s Crossbred roving weighing 4 drams for 40 yds. It is required to spin to 40s counts, find the spinning draft.

Then (a) No. of yds. per lb. of yarn $= \underset{\text{Counts.}}{40} \times \underset{\substack{\text{yds. per} \\ \text{hank.}}}{560}$

(b) ,, ,, $= \underset{\substack{\text{len. rove.} \\ \text{Drs. per} \\ \text{40 yds.}}}{\frac{40}{4}} \times \underset{\text{drs. per lb.}}{\frac{256}{1}} \times \text{draft.}$

$\therefore$ equation a = b.

$$\text{and draft} = \frac{\underset{\text{Lgth. rove.}}{40} \times \underset{\text{Drs. per lb.}}{560}}{\underset{\text{Lgth. rove.}}{40} \times \underset{\text{Drs. per lb.}}{256}} \times \frac{4}{1} = 8{\cdot}75$$

Obviously, the yards per hank, drams per lb. and selected unit length of 40 yds. of rove must occur in every problem of this kind. Consequently the reduction of these three constant factors to one simple equivalent, as in example 1, gives a result which can be used as a gauge point.

EXAMPLE 4. The gauge point for 40 yds. roving is 18·3 drams. Find the amount of draft if 40 yds. of roving weigh 10 drams, when it is required to spin to 10s.

Then $\frac{18{\cdot}3}{10\text{s counts}} = 1{\cdot}83$ drs. = the weight of 40 yds. of 10s.

and $\frac{10}{1{\cdot}83} = 5{\cdot}4$ amount of draft required to draw the 10 drs. to 1·83.

or weight of roving × counts ÷ gauge point = draft.

$$\frac{10 \times 10}{18{\cdot}3 \text{ (gauge point)}} = 5{\cdot}4 \text{ draft.}$$

EXAMPLE 5. If 40 yds. of roving weigh 7·3 drs. find the counts when a draft of 8 is given.

Then $\frac{7{\cdot}3 \text{ drs.}}{8}$ = the weight of 40 yds. with a draft of 8.

$$\text{and } 18{\cdot}3 \div \frac{7{\cdot}3}{8} = 20\text{s counts}$$

or the No. of times lighter than the gauge point for 1s counts with a draft of 8.

$$\text{or } \frac{\text{Gauge point} \times \text{draft}}{\text{Weight of roving}} = \text{counts} = \frac{18{\cdot}3 \times 8}{7{\cdot}3} = 20\text{s}$$

EXAMPLE 6. Find the weight of 40 yds. of roving when a frame is spinning 40s worsted with a draft of 4.

Then $\frac{40}{4} =$ 10s counts of the roving before being drawn out.

and $\frac{18{\cdot}3}{10} = 1{\cdot}83$ drs. The weight of 40 yds. of 10s. worsted.

$$\text{or } \frac{\text{Gauge point} \times \text{draft}}{\text{Counts.}} = \text{Weight of roving} = \frac{4 \times 18{\cdot}3}{40} = 1{\cdot}83 \text{ drs.}$$

EXAMPLE 7. Given 40 yds. of roving weighing 1·83 drs. Express the same in counts of roving as is common in the cotton industry.—See also pages 619 and 621.

SOLUTION.

Then $$\frac{\text{Gauge point for 40 yds. rove.}}{\text{Weight of 40 yds. of rove.}} = \frac{18{\cdot}3}{1{\cdot}83} = 10.$$

If the usual stock qualities of rovings are reduced to such standard equivalents, then the amount of draft required for any given count of yarn can be ascertained mentally.

100. Productive Problems. When the turn off per day, for any given number and speed of spindles and turns per inch, is known, this length for the specified number of turns can be and frequently is used as a gauge point for determining pro rata the product of any other yarn where the turns are specified and the speed and number of spindles are known.

EXAMPLE 1. A spinning frame having 144 spindles which revolve at an average of 1983 per minute, produced 5·1 gross of hanks per day of 24s mohair or alpaca containing 10 turns per inch. Find (a) the weight in lbs. per day; (b) the gross of hanks and weight if the yarn receives 12 turns per inch of 32s. mohair counts.

(a) $\frac{5{\cdot}1 \text{ gross of hanks} \times 144 \text{ hanks per gross}}{24 \text{ hanks per lb. of mohair}} = 30{\cdot}6$ lbs. per day.

(b) Since the length of the yarn delivered by the front spinning rollers varies in the inverse proportion to the number of turns per inch, other factors remaining constant ; therefore

As 12 turns : 10 turns : : 5·1 gross : 4·25 gross hanks

and $\frac{4{\cdot}25 \times 144}{32} = 18\frac{1}{8}$ lbs. per day.

CHAPTER XLVII.

101. *Automatic "Flyer" Doffer.* 102. *Constructional details of Fly-Doffer Mechanism.* 103. *Action of Doffing Mechanism and sequence of Operations.* 103a. *Whorl for Mohair and Lustre Yarns.* 104. *Details of the Automatic Cap Doffer Mechanism.* 105. *Cap and Bobbin removal Mechanism.* 106. *Action of Cap Doffing Mechanisms and sequence of Operations.*

AUTOMATIC DOFFERS.

For more than three decades the problem of automatically doffing full bobbins and replenishing empty ones on the spindles of flyer, cap, ring spinning, twisting and analogous frames for worsted, cotton, flax, jute and hemp, has been most seriously considered by a host of inventors. The problem may now be considered to be solved as far as principle is concerned ; many improvements in details may yet be patented and already existing inventions may have to be scrapped, but of this, there is no doubt—the automatic doffer has come to stay, not only because of labour saving and for economical reasons, but because the idea is right and the principles of mechanisms already evolved are sound.

The function of automatic doffing devices consists simply in removing the full bobbin from the spindle and of replacing it with an empty one.

These operations, when performed by hand, are extremely simple, but when performed automatically by machinery, they involve numerous ingenious mechanical devices and combinations of mechanism and motions.

101. Automatic "Flyer" Doffer. Briefly, the automatic doffer for fly frames is characterised as follows :— The flyers are supported and rotated from above, independently of the spindles, as distinguished from below and by the spindles as is common in ordinary and normal spinning frames.

The spindles are mounted and compounded with the lifter plate and are approximately of the same length as the bobbins. The bobbins are constructed with ball bearings which rotate contiguously with and near the base and top of the spindle.

A duplicate lifter rail with the full complement of spindles is provided and filled with empty bobbins all of which are temporarily stored ready to be bodily interchanged with the lifter rail, spindles and full bobbins.

Where tubes are required to be filled instead of bobbins or spools, the tube "shells" simply replace these and are provided with ball bearings similarly to the bobbins or spools.

The drag on the bobbins or tube shells is regulated by the usual means of washers.

The depending flyers are supported, mounted and free to rotate in a steel rail extending the full length of the frame.

A whorl compounded with the neck of the flyer is provided with steel ball bearings which rotate in contiguity with the whorl and its tube support. Small steel cups of cone formation rotate in contact with ball bearings at the top of the flyer and supporting cross rail.

102. Constructional details of Fly-Doffer Mechanism.

Fig. 322 is a perspective front view of part of an Aked, Prince Smith mechanical flyer doffer.

Fig. 323 is a part front elevation, sufficient to show the essential details of the operative mechanism. Fig. 324 shows a detached spindle.

Fig. 325 shows a detached flyer and a portion of the top cross rail with which it is mounted ; also a portion of the lifter rail and a dead spindle and spool combined, but detached from the frame.

Fig. 326 is an end elevation showing part of the frame and full bobbin ready for doffing, together with several of the operating devices in their relative position to each other.

Fig. 327 is a detailed view after the lifter rail, spindles and full bobbins have been removed.

Fig. 328 shows a similar elevation but with the second lifter rail, spindles and empty bobbins raised into alignment with and received by a lateral operating rack.

Fig. 329 shows the same view, with the lifter, spindles and empty bobbins raised into position, complete and ready to resume the operation of spinning immediately

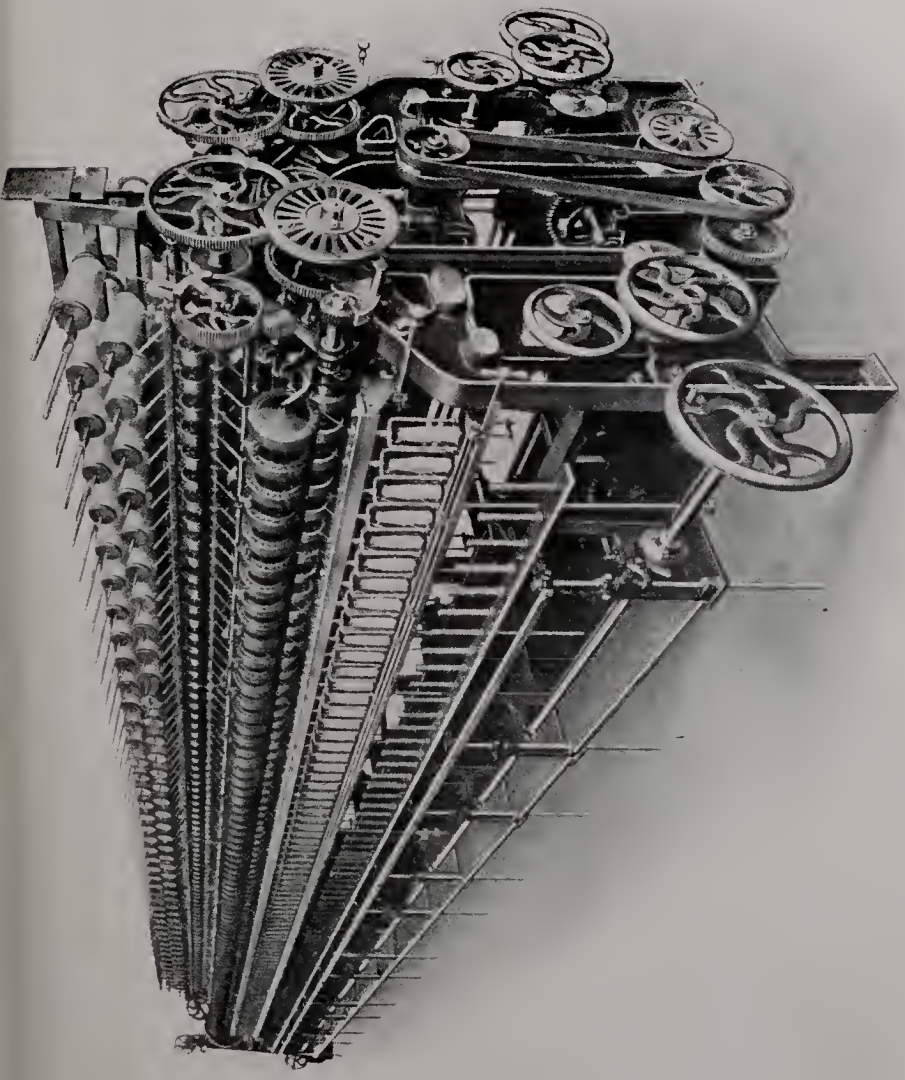

Fig. 322.
MECHANICAL FLYER DOFFER.

UNIVERSITY OF MICHIGAN
ANN ARBOR

the threads connecting the full and empty bobbins have been severed.

The numerals of like denomination in each of the foregoing diagrams refer to similar details.

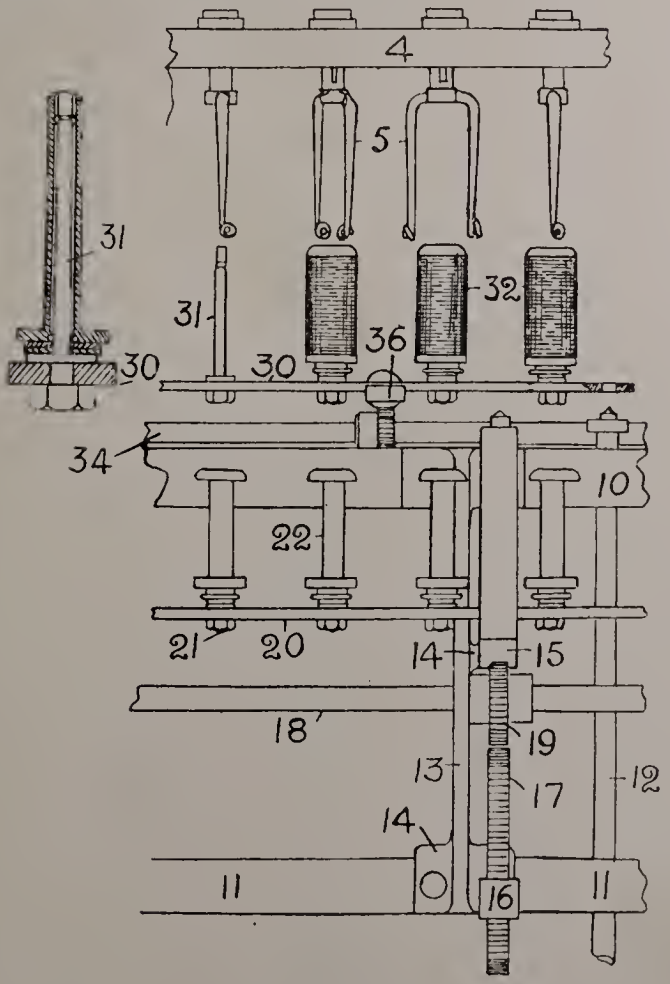

Fig. 324. Fig. 323.

1 indicates a portion of the machine framework, 2 the front rollers, 3 the spun thread, 4 the top cross rail

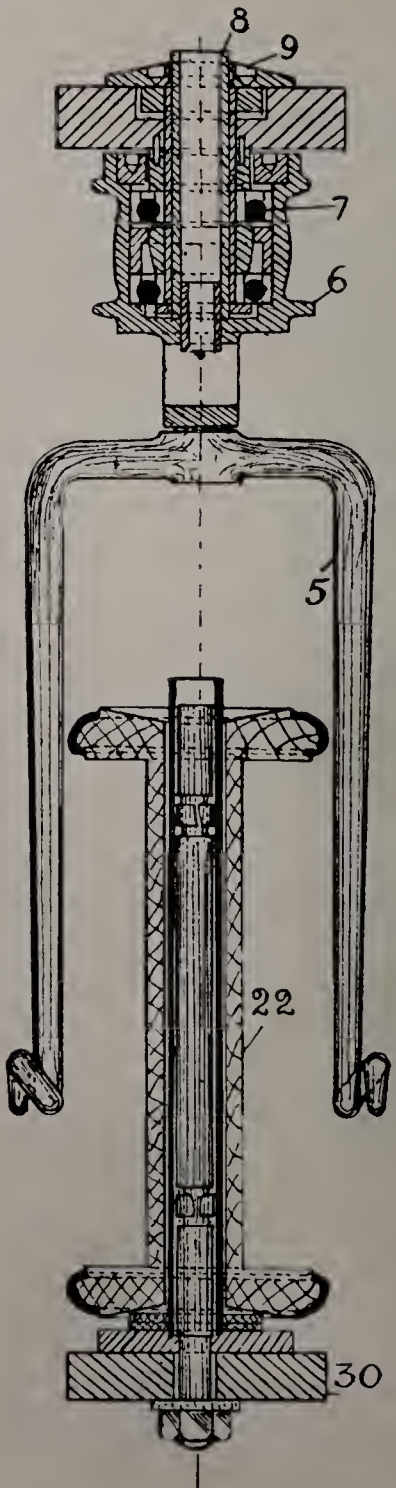

Fig. 325.

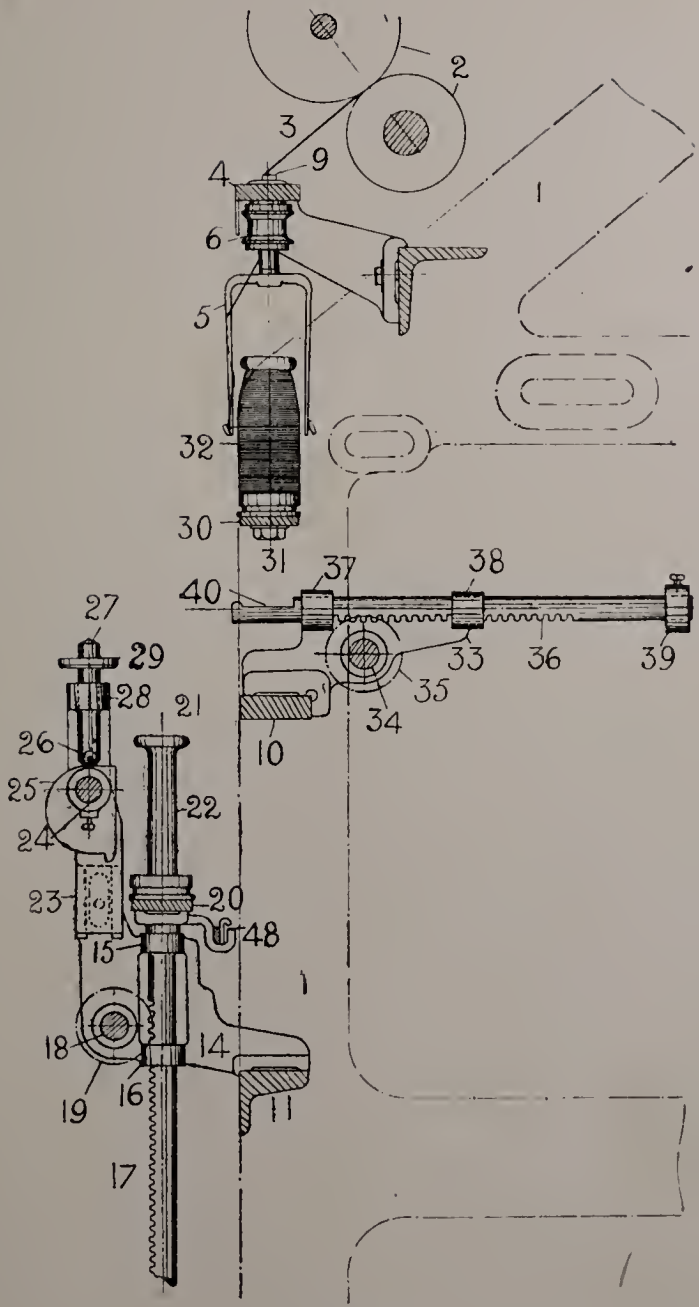
1
2
3
4
9
6
5
32
30
31
37
38
40
27
29
28
21
26
25
22
24
23
20
48
15
18
14
19
16
11
17
10
33
36
39
35
34

Fig. 326.

upon which the flyers 5 are mounted and free to rotate, 6 is the whorl compounded with the neck of the flyer, 7 the ball bearings which are contiguous to the whorl and a central steel tube 8. A small cone cup 9 is mounted and free to rotate in and about the top of the cross rail 4. The whorls are now fitted with a *hardened steel eye* attached to the revolving inner tube 8. This eye presents a smoother surface to the thread than is possible without its use. See also Fig. 330a.

A convenient number of vertical rods 12, pass freely through the cross rails 10 and 11. These rods are pointed at the top and constructed with a flanged shoulder or collar as shown on which the lifter rails freely rest and by which means they are normally reciprocated in a vertical plane.

A series of brackets 13 are compounded with the cross rails 10 and 11 at suitable intervals apart.

Compounded with the brackets 13 are a like series of bracket arms 14 which have two slide guides 15 and 16 through which a vertical rack bar 17 can freely reciprocate in a vertical plane.

A cross shaft 18, extending the full length of the machine and mounted on an extension of the arms 13 is free to oscillate at will by hand. Compounded with shaft 18 is a rack pinion 19 the spur teeth of which intermesh with those in the rack bar 17.

The top of the rack bar 17 is specially constructed to accommodate and raise when required, a duplicate lifter rail 20 with spindles 21 and empty bobbins 22 into correct alignment with a horizontal rack 36.

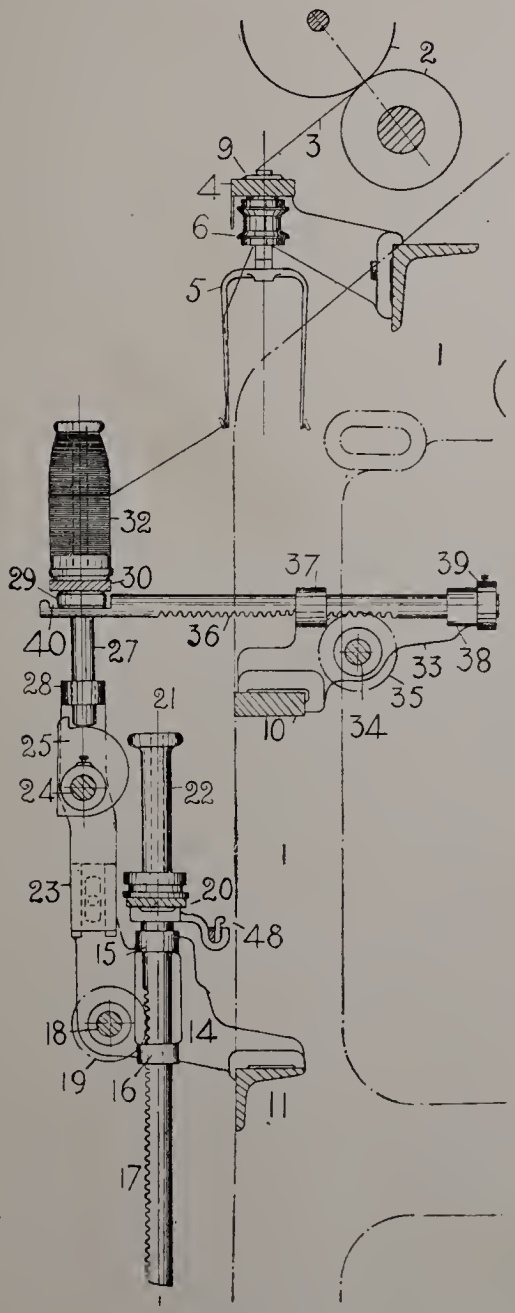
2
3
9
4
6
5
1
32
29
30
37
39
40
27
36
33
38
28
21
35
10
34
25
24
22
1
23
20
48
15
18
14
19
16
11
17

Fig. 327.

An adjustable extension 23 of the bracket 14 and their duplicates support a shaft 24 which oscillates in its bearings and extends the full length of the frame.

A cam 25 is compounded with the shaft 24 and operates preferably in rolling contact with an antifriction bowl 26 or alternately with the base of a short spindle 27 with which the bowl 26 is mounted and free to rotate near its base.

The spindle 27 is passed freely through a sleeve 28 formed in the top part of the extension bracket 23. The spindle 27 is tapered at the top and provided with a flange or collar 29 designed for the purpose of temporarily receiving, retaining and operating, at will, the lifter plate 30, spindles 31 and full bobbins 32.

A series of bracket arms 33 support a shaft 34 which extends the full length of the machine and carries a like series of rack pinions 35 having spur teeth which intermesh with like teeth in a horizontal rack 36 supported and free to reciprocate in the sleeves 37 and 38 forming part of the bracket 33.

An adjustable collar 39 limits the distance of the lateral traverse of the rack 36. A recess 40 is formed on the upper surface and near the left side of rack bar 36.

The function of the rack 36 is to first receive and momentarily hold the lifter rail 30 with its complement of spindles 31 and full bobbins 32 and then move them laterally outwards from their vertical alignment with the flyers 5 and the normal lifter rods 12; afterwards it receives and momentarily retains the duplicate lifter

rail 20 with its complement of spindles 21 and empty

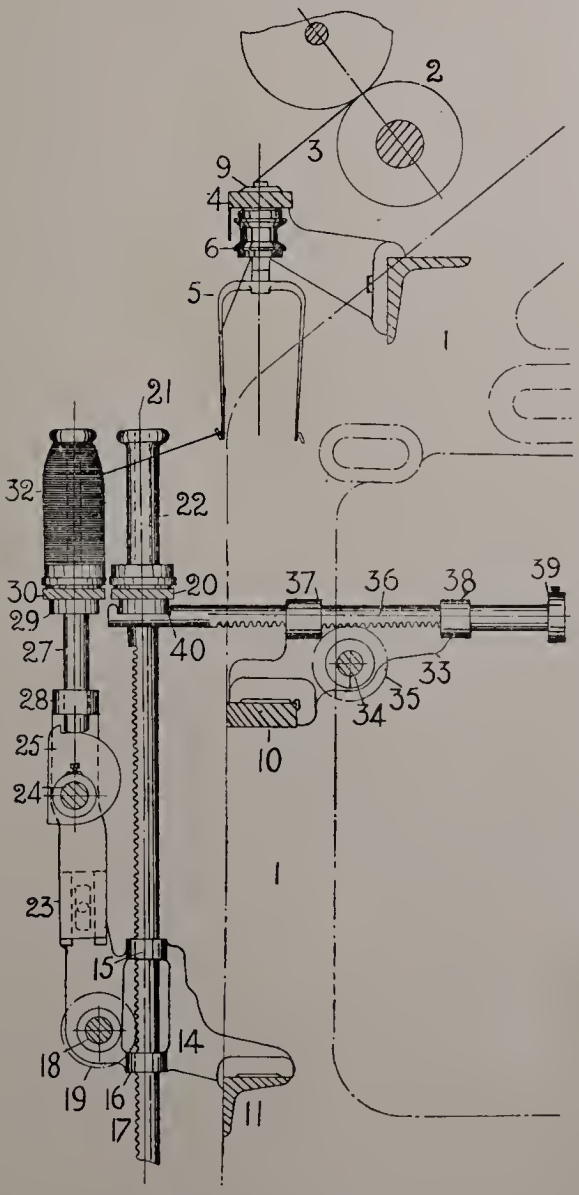

Fig. 328.

bobbins 22 and then moves them laterally to the right

into vertical alignment with the flyers 5 and normal lifting rods 12.

The function of the rack rod 17 and the pin rod or spindle 27 is to engage the respective lifter rails 20 and 30 and detach *first* the rail 30 with spindles 31 and full bobbins 32 from their temporary support and contact with the supporting rack bar 36, and *second* to elevate the lifter rail 20, spindles 21 and empty bobbins 22 into alignment with the horizontal rack 36, preparatory to their reception by this rack and subsequent lateral movement into alignment with the flyers 5 and normal spinning position as above.

A thread severing apparatus is shown at 48 which consists essentially of two members which extend the full length of the machine. One member is movable in relation to the other and by which means the threads are cut.

103. Action of Doffing Mechanism and sequence of Operations. Immediately a predetermined length of yarn has been spun and wrapped on the bobbin 32, the process of doffing the full bobbins and replacing them by empty ones is performed in sequence as follows :—

1. Place all the flyers with their " wings " in the same plane as the third flyer in Fig. 323 which may be accomplished by the operator running his hand over the whole of the flyers from end to end of the frame.

2. Lower the lifter rail 30, with its complement of full bobbins into the notched recess 40 of the horizontal

rack 36 which is normally directly underneath the lifter plate 30 as in Fig. 326.

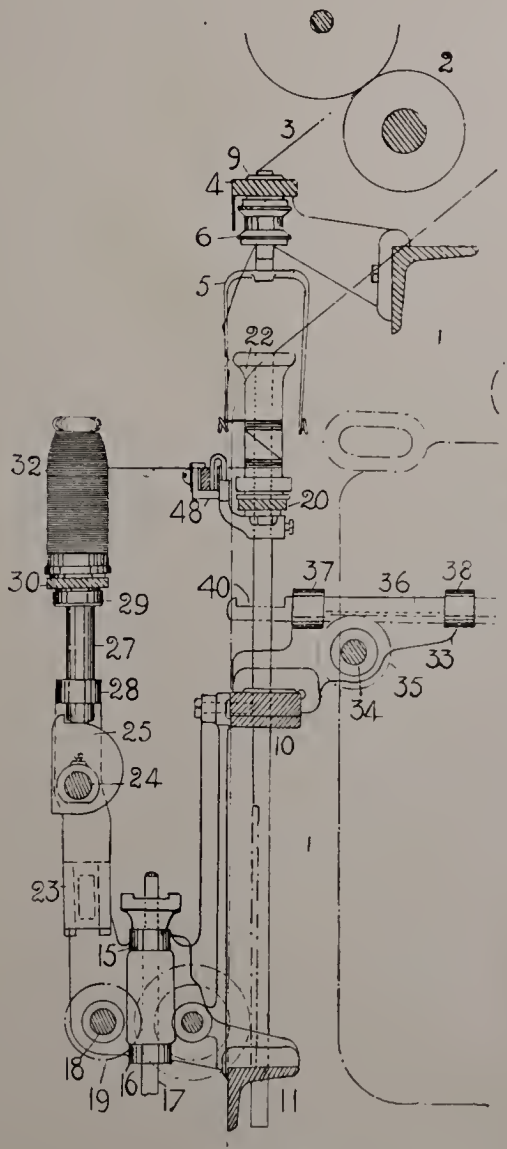

Fig. 329.

3. Continue to lower the lifter rods 12, clear of the lifter rail 30, spindle 31 and bobbins 32. Fig. 323.

4. Manually rotate the rack pinion shaft 34 so as to move rack 36 with its load, a sufficient distance outwards from alignment with the flyers until the lifter rail 30 is immediately above the pin rods 27 (Fig. 327).

5. Rotate by hand the cam shaft 24 with cam 25 so so to elevate the antifriction bowl 26 with pin spindle 27 until the last penetrates the opening in the lifter rail 30. Continue this rotation until the lifter rail has been detached and raised clear of the rack 36.

6. Rotate the rack pinion shaft 34 to withdraw the rack 36 to its original normal position clear of the path of motion of both lifter rail 30 and its duplicate rail 20.

7. Rotate the rack pinion shaft 18 and pinion 19 by hand so as to elevate the vertical rack 17 together with the duplicate lifter rail 20, spindles 21 and empty bobbins 22 to a height which is slightly above the horizontal plane of the rack 36. Next move the rack bar 36 underneath the rail 20 and then lower the rail 20 on to the supports 40 (Fig. 328).

8. Reverse the rack pinion shaft 18 with pinion 19 so as to slightly lower the rack bar 17 from contact support with the rail 20. Then rotate manually the rack pinion shaft 34 and pinion 35 so as to move the rack bar 36 backwards with its lifter rail 20 and its complement of spindles and empty bobbins, into correct alignment with the flyers (Figs. 329).

9. Bring the ordinary lifter rods 12 into action so as to lift the substituted lifter plate 20 with its load of spindles and bobbins, clear of rack bars 36 and to its normal height and plane of reciprocation (Fig. 329).

10. Finally the thread severing apparatus 48 is raised by means of a foot lever to the height shown in Fig. 329 where the cutting apparatus is in contact with the

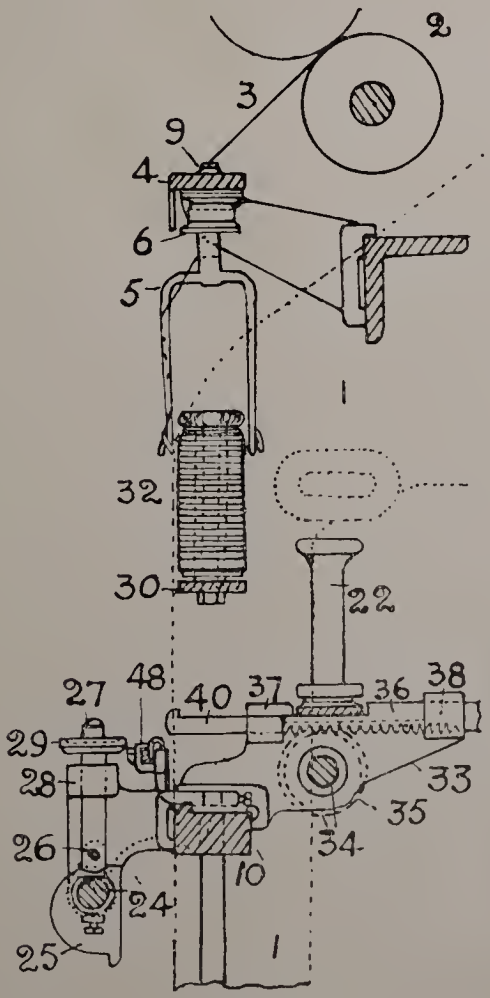

Fig. 330.

yarn 3, stretched between the twizzle and the flyer and the full bobbin. Then after a few revolutions have been given to the bobbins 21 so as to wrap some thread on to

these bobbins, the severing apparatus 48 is oscillated in a horizontal plane when all the stretched threads 3 are immediately severed.

The full bobbins may now be removed from their temporary supports and replaced by empty ones in the usual way and without any interference with the spinning operations.

It is no uncommon thing to perform all the sequence of operations in much less time than it takes to enumerate them and without the breakage of a single thread.

In a recent modification of the flyer doffing mechanism, the duplicate lifter plate with the empty bobbins, instead of being raised and deposited on to the horizontally reciprocable rack, may be mounted on it at the rear of the lifter plate containing the full bobbins, so that when the full bobbins are moved forward, directly above the cam operated spindles, the empty bobbins will be directly below the flyers.

When the full bobbins have been deposited on to the cam operated spindles and the empty bobbins raised to the spinning position, the horizontally reciprocable racks are returned to the normal position. See Fig. 330.

103a. Whorl for Mohair and Lustre Yarns.

Fig. 330a shows an outline of a recent patent type of flyer whorl used on the foregoing Flyer Doffer. This has been designed specially for spinning mohair and lustre yarns. The advantages obtained by this new whorl 6 on bright goods are due to the absence of obstruction in the passage of the thread 3 from the

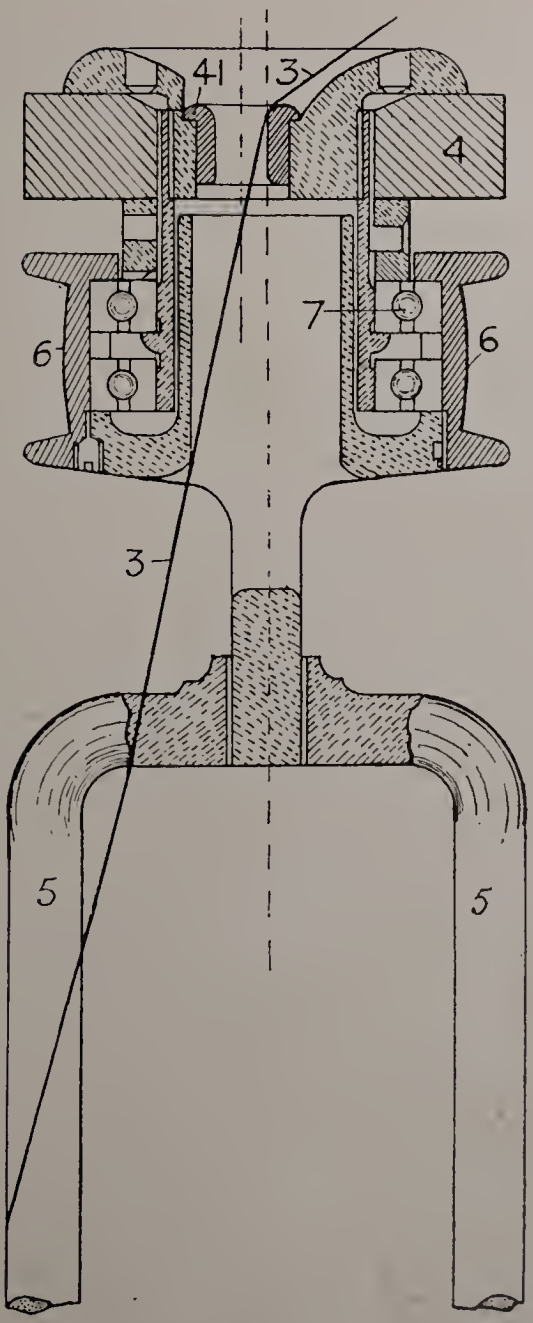

Fig. 330A

nip of the rollers to the wing of the flyer 5. The thread after leaving the nip of the front rollers passes through a stationary pot guide 41, which takes the place of the usual pot eye employed on common spinning frames. From this pot guide the thread has a clear passage until it reaches the flyer, the clearance being obtained by making the whorl and its adjuncts larger than the ordinary type.

The inner revolving tube of the usual type is dispensed with in this whorl, and the construction of the bottom part of the whorl is somewhat different. The pot guide is set eccentric to the centre of the whorl so that the thread when passing through the pot guide is exactly central with the spindle.

Automatic Cap Doffers.

Numerous devices are being adopted to remove, by mechanical means, the full bobbins from a cap frame and replace them with a corresponding set of empty bobbins. Mechanical means are also devised for piecing up the threads, in such a way, that immediately on being broken, any tendency they may have to wind on the whorl is reduced to a minimum and also to neutralise any tendency of the yarn to get entangled with the tapes when unwinding from a full on to an empty bobbin.

104. Details of the Automatic Cap Doffer Mechanism.

Fig. 331 shows a front elevation of a portion of a cap doffer as made by Prince Smith & Son.

Fig. 332 shows an end elevation of part of the frame which illustrates the wheels and levers as used and operated by hand during

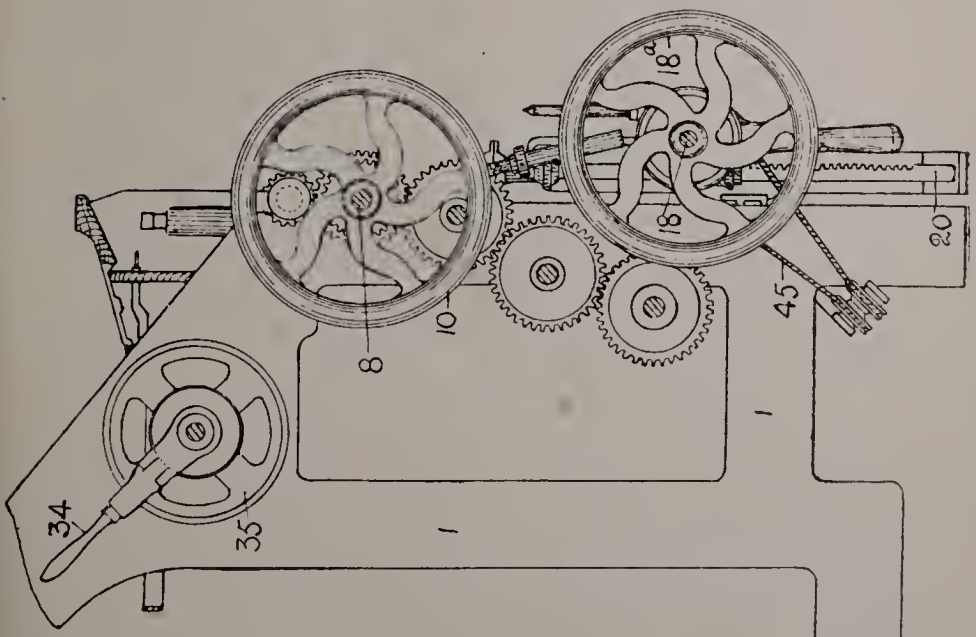

Fig. 332.

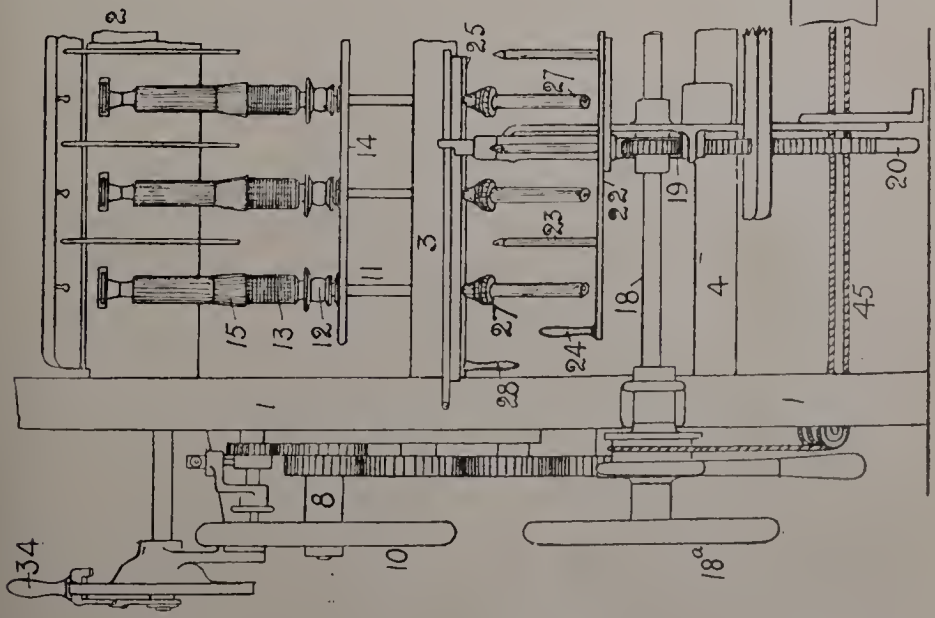

Fig. 331.

the removal of the full bobbins and substitution of the empty ones to and from the tubes.

Fig. 333 is a vertical section showing the essential details of the automatic doffing mechanism and their relation to each other during the period of actual spinning.

Fig. 334 shows a portion of the same details with the cap and full bobbin removed and momentarily held in suspension above the spindles.

Fig. 335 shows the relative positions of the mechanical details immediately after the full bobbin has been transferred to the full bobbin peg.

Fig. 336 gives a detail of the mechanism which illustrates the first step in the process of " piecing-up."

Fig. 337 illustrates a further step than Fig. 336 in the same operation.

Fig. 338 shows a vertical section of the above details of mechanism in relation to each other immediately after the completion of the operation of doffing and at the moment immediately preceding the operation of severing the threads connecting the full with the empty bobbins.

Figs. 339 to 345 inclusive show diagrammatically the piecing up devices and their relative position to each other during the sequence of operations in the process of piecing up.

Fig. 346 is a detached view of the special form of bobbin holder.

Figs. 347, 348 and 349 shows additional details of mechanism.

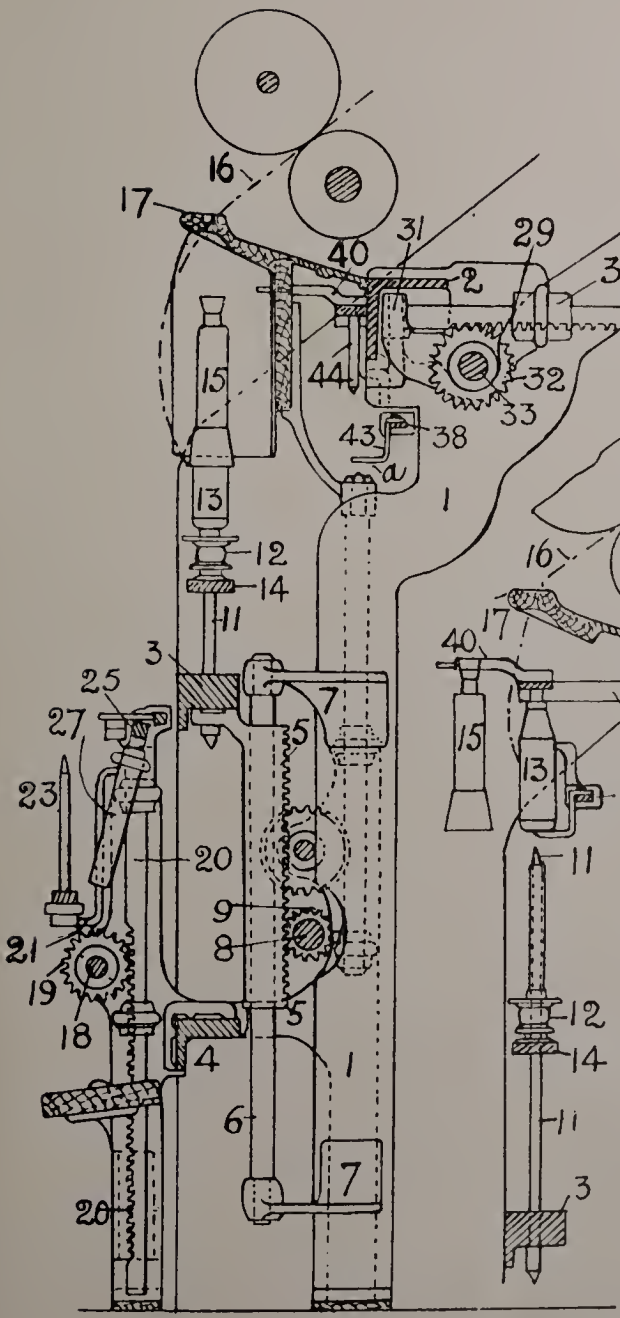

Fig. 333. Fig. 334.

Similar numerals in the Figs. 331 to 349 inclusive, refer to corresponding details.

Part of the machine gable is indicated at 1. 2, 3 and 4 are cross rails which extend the full length of the machine. The upper rail 2 and lowest rail 4 are *fixed* between the machine gables but the rail 3 which supports the spindles is carried on a vertical rack 5 with which it is free to reciprocate in a vertical plane. The rack 5 is freely mounted on a vertical rod 6 suitably fixed to the machine gable 1 by brackets 7. A shaft 8 extends the full length of the machine and carries at suitable intervals, a series of rack pinions 9 the teeth of which internesh with those of the rack 5 and its respective duplicates across the full length of the frame. Fig. 333.

Compounded with the shaft 8 is a hand wheel 10 which may be worked at will to rotate the rack pinion 9 as desired. The spindles 11 are carried by the cross rail 3 which in turn is connected by toothed gearing to the shaft 8 and by which means the rail 3 is reciprocated. Freely mounted on the spindles 11 are the usual bobbin shells and whorls 12 on which are fixed the bobbins 13. The shells 12 and bobbins 13 are carried, as is usual, by a lifter rail 14, in turn supported on the customary lifter rods and reciprocated in a vertical plane as is common. The cap 15 is carried, as is usual, at the top of the spindles 11. The spun thread is indicated at 16 and the top guide board through which the thread is directed to the cap and bobbin at 17. The caps are free to be detached and temporarily held in suspension until the full bobbins are lifted en masse

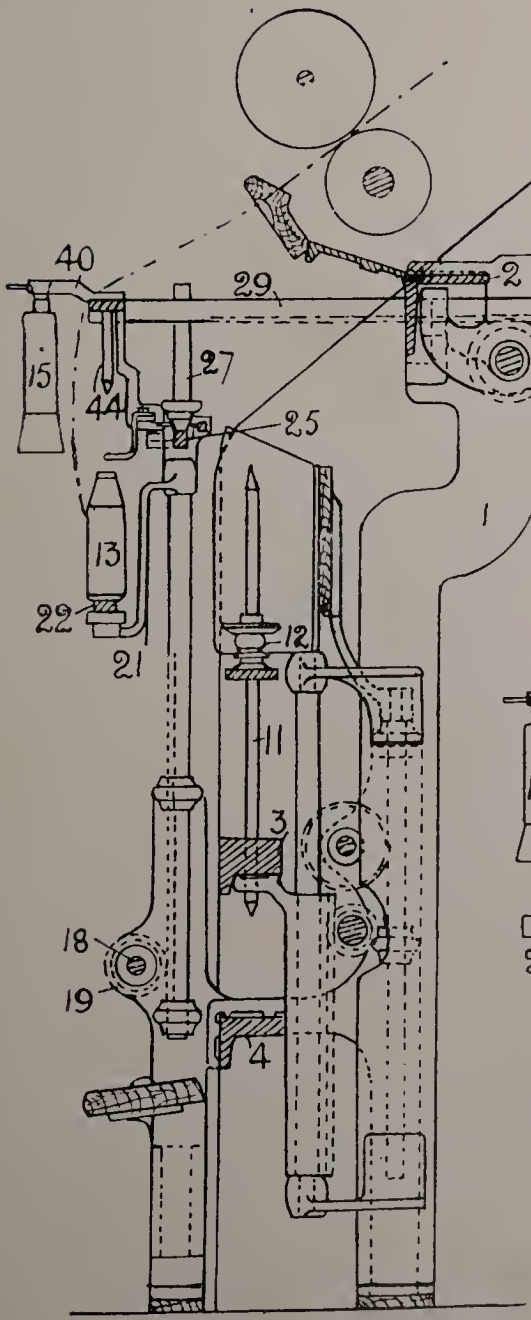

Fig. 335.

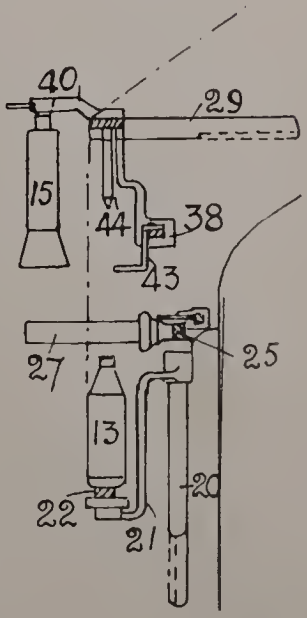

Fig. 336.

and clear of the spindles to be immediately replaced by a set of empty spools.

For the above purpose a second horizontal rack pinion shaft 18 extends across the full length of the frame and is provided with a hand wheel 18a by which it can be rotated at will. Compounded with the shaft 18 is a rack pinion 19 the teeth of which intermesh with those of a second vertical rack 20 suitably supported from the machine gables. The rotation of the rack pinion 19 produces a vertical reciprocation of the rack 20. Compounded with the upper part of the rack 20 is a bracket arm 21 to which is attached a peg rail 22, having pegs 23 on which the full bobbins may be subsequently deposited in a body. The peg rail 22 is free to be moved longitudinally a distance equal to a full pitch of the spindles by means of a hand lever 24.

The rack 20 also carries an additional peg rail 25 on which is mounted a number of spindles 26 (Fig. 346) equivalent to the number of spinning spindles.

The spindles 26 are of special construction being provided with compressible springs for the purpose of rigidly retaining the empty spools 27. Fig. 346.

The combined rails 25, pegs 26 and empty bobbins 27 are free to be oscillated through an angle of 180°. A hand lever 28, compounded with the rail 25, is provided and used for this purpose.

105. Cap and bobbin removal Mechanism.

A rack bar 29 is supported by and free to reciprocate in a horizontal plane through two sleeves 30 and 31 forming part of a bracket and in turn compounded with the machine framework. The teeth of

a rack pinion 32 intermesh with those of the rack 29 by which means the latter is reciprocated.

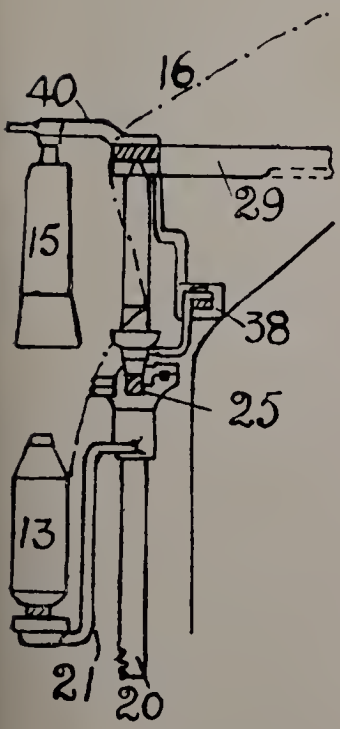

Fig. 337.

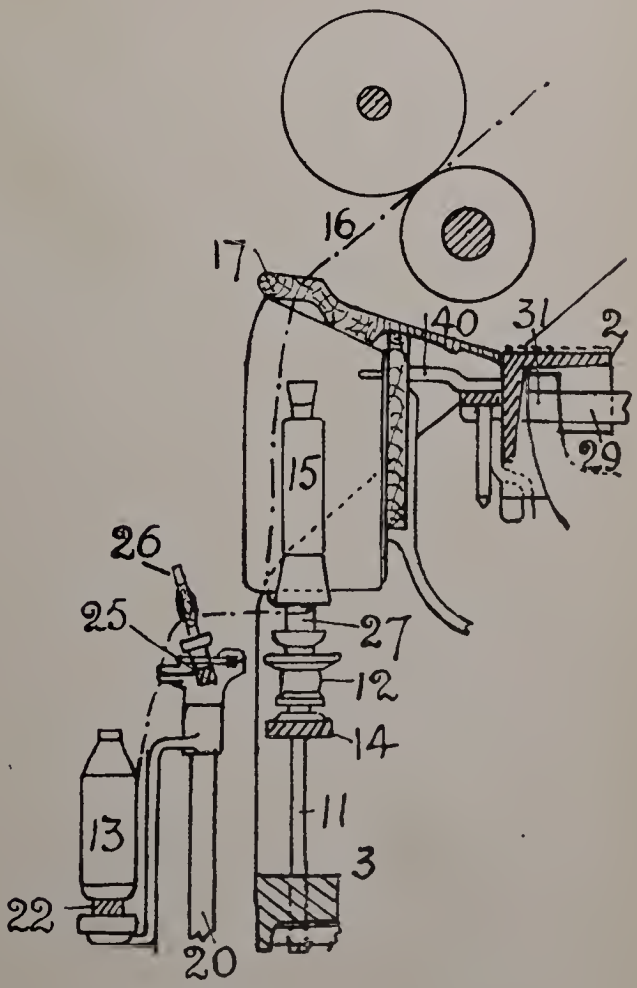

Fig. 338.

The rack pinion 32 is compounded with a shaft 33 which extends the full length of the frame and from which it is supported and free to oscillate in its bearings.

The rotation of the shaft 33 with pinion 32 is controlled by a hand lever 34 combined, at will, with a stationary knotched wheel 35.

The hand lever 34 is compounded with the shaft 33 and may be moved at will, through any desired angle to suit the predetermined traverse of the rack bar 29.

Also compounded with the rack bar 29 is a bracket arm 36, on the upper end of which and its duplicates, a rail 37 is supported and extends the full length of the machine. See Fig. 347. The lower arm of bracket 36 is designed to carry a rod 38 which also extends the full length of the machine.

The bracket arm 36 is further utilised to carry the boards 39 supporting the tins which are placed normally mid-way between the adjacent caps.

Mounted upon the upper continuous rail 37 is a series of small brackets 40,—one for each cap—usually denominated "cap grabbers" or holders since their function is to lay hold of and remove the cap from its supporting spindle. Combined to operate with the cap holder is a small steel "stamping" 41 which is compounded with a rod 42 in turn supported but free to move longitudinally in the direction of its length so as to cause the stamping plates 41 to move into, or from close contact with the neck of the cap 15. Fig. 348.

A second series of steel stamping plates 43—one for each bobbin—is constructed as shown to form a right angle and mounted on the continuous rod 38 with which it is free to move horizontally in the direction of the length of rod 38, or in conjunction with it towards, or

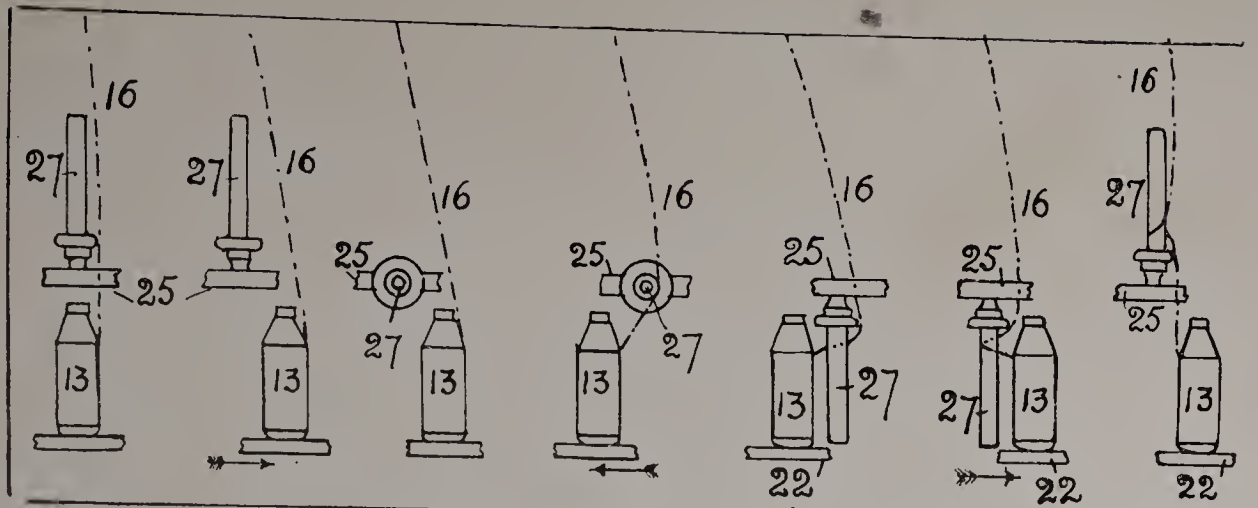

Fig. 339. Fig. 340. Fig. 341. Fig. 342. Fig. 343. Fig. 344. Fig. 345. Fig. 346.

from the bobbin. The function of the stamping rod 43 is to move its projecting arm (a) directly under the heel of the spool or bobbin and momentarily support it until the spindle has been withdrawn, Fig. 349.

44 is a depending peg on which the bobbins are momentarily held (1) before being transferred to the full bobbin peg or (2) before the subsequent empty bobbin is dropped on to the cap spindle. 45 is an endless rope connecting counterpoise weights with the spindle rail 3.

106. Action of Cap Doffing Mechanisms and sequence of Operations. The sequence of operations and manner of automatically doffing the full bobbins from a cap frame and replacing by a like number of empty bobbins, tying or piecing up the yarns or threads from the full to the empty bobbins and severing the piecings before starting up again for a new spin, are performed as follows :—

1. Drop the lifter rail 14, in the usual way, with tubes and whorls 12 and full bobbins 13, a sufficient distance to leave a clear space in which to bring forward the cap holder 40 together with its operating adjuncts.

2. Bring the cap holder or grabber 40 forward until the aperture in the cap holder is centrally over the cap 15 bobbin 13 and spindle 11. This operation is accomplished by the partial rotation of the hand lever 34 and rack pinion 32 and by connections already described, the rack bar 29, bracket arm 36 and cap holder 40 are moved forward to the predetermined distance.

3. Lift the spindle rail 3 together with the lifter rail 14, spindles 11, bobbins 13 and cap 15 until the " head " of the cap passes through the aperture in the cap holder

40. This operation is produced by normally turning the hand wheel 10, shaft 8, and pinion 9 and thereby lifting the vertical rack 5, spindle rail 3 etc., as already described.

4. Grip the cap by moving the rod 41 longitudinally until the stamping plate 42 is brought into contact with the neck of the cap.

5. Drop the spindle rail 3, with spindles 11 and full bobbin 13 until they are clear of the caps 15.

6. Move the cap holder with depending caps further outwards, until the cap holder is not only clear of the spindles, etc., but the depending peg 44 is directly above and concentric with the spindles 11 and full bobbins 13.

7. Lift the spindle rail with full bobbins until the heel of the latter is directly opposite the arm (a) of stamping plate 43; next move the rod 38 longitudinally so as to bring the arm (a) of plate 43 immediately underneath the base of the bobbin 13 and remove the full bobbins on to the depending peg 44. The bobbins are retained in this position by moving a stamping plate into close temporary contact. See Figs. 333 to 338.

7a. By an alternative method, Fig. 349, the bobbins 13 are supported in conjunction with the cap. The spindle rail is lowered until it is perfectly clear of the caps 15 and bobbins 13.

8. Drop the spindles until they are clear of the suspended bobbins. See Fig. 334 and dotted lines in Fig. 349.

9. Move grabber 40 outwards until the full bobbins are suspended immediately over the empty pegs 22.

10. Lift the empty peg rail 22 up towards the full bobbins 13.

11. Release the frictional contact on the full bobbin and simultaneously withdraw the stamping plate 43 laterally, from supporting the bobbins so that they immediately drop freely on to the pegs 23, as in Fig. 335.

12. Lower the peg rail 22 with its complement of full bobbins into the position shown in Fig. 336 ready for forming the loop or "hitching" the thread on to the empty bobbin 27.

This operation is performed by rotating the hand wheel 18a and rack pinion 19 to depress the rack 20 with all its mechanism.

13. Rotate, through an arc of a circle, the empty bobbin rail 25 with bobbins 26 from their *normal* positions as shown in Figs. 331, 2 and 3 first, to the position as at Fig. 336 and then successively to the positions as at Figs. 339 to 345 inclusive.

These operations are performed as follows:—

(a) Beginning with Fig. 339, rail 22 with the full bobbins is moved horizontally, half the pitch of the spindles as in Fig. 340.

(b) The empty bobbins 27 and rail 25 are rotated through an angle of 90° to the position as in Figs 341 and 336.

(c) Move rail 22 a whole "pitch" to the left as in Fig. 342.

(d) Rotate the rail 25 and empty bobbins 27 through an additional 90° as in Fig. 343.

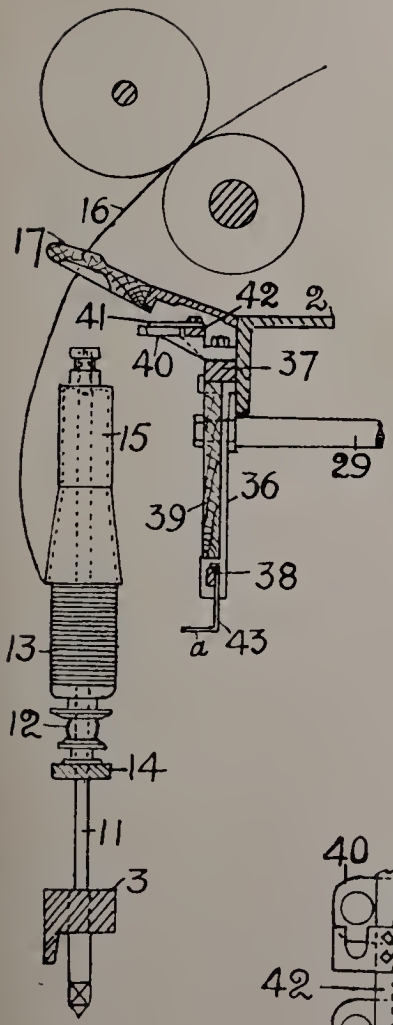

Fig. 347.

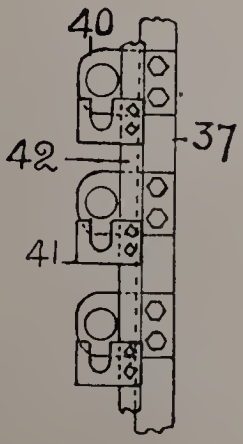

Fig. 348.

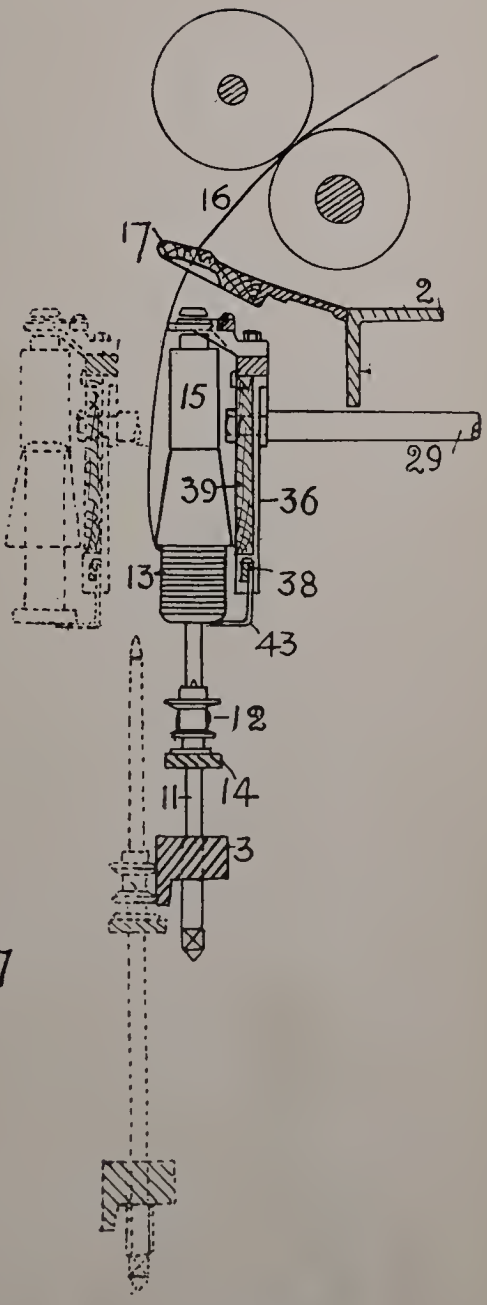

Fig. 349.

(e) Move the rail 22, a whole pitch to the right as in Fig. 344.

(f) Rotate the rail 25 with the empty bobbins 27, through an angle of 180° to the position shown in 345, where it will be observed that the thread from the full spool has been wrapped once round each empty bobbin.

14. Move rack bar 29 with cap holder 40 backwards, until the depending pegs 44 are centrally above the spindles 26 and empty spools 27 and raise the rack 20 with rail 22 and empty bobbins 27 until they are upon the depending pegs 44, where the empty bobbins are gripped and temporarily retained by the stampings 41. See Fig. 337.

15. Adjust the rack 29 until the depending pegs 44 with the empty bobbins are directly over the spinning spindles 11. Release the bobbin and allow it to drop freely on to the spindles 11.

16. Move the rack bar 29 with cap holder 40 and depending cap 15 until the last is directly and centrally over the spindle and then raise the spindle rail 3 with spindle 11 until the latter enters the cap which is then released and moved back to its normal position of rest and the spindles with caps are lowered into the position as shown at Fig. 338.

N.B.—The threads are now stretched from the removed full bobbins, past the empty spindles 26 to the empty bobbins 27 and from these to and through the wire board 17 to the nip of the front rollers.

17. Repeat the tying operation described in sequence 13 on to the bare spindles 26. Then the threads will be connected between the bobbins 27 and the bare spindles 26, Fig. 338, and therefore immediately the spindles are set in motion the thread is severed and without drawing any yarn off the removed full bobbins.

CHAPTER XLVIII.

WORSTED MULE SPINNING.

107. *Worsted Mule Functions.* 108. *Essential details of the Worsted Mule.* 109. *Varying Speed of the Spindles.* 110. *Winding the Yarn on to the Cops.* 111. *General Functions and Sequence of Operations.*

THE principle of Mule Spinning is applied to three chief classes of spun yarns; *first* woollen, *second* cotton and *third* worsted.

The prepared worsted rove from French drawing is almost invariably spun into yarn on the worsted mule and many worsted carded English wools are not infrequently spun on the same mule.

107. Worsted Mule Functions.

In the worsted mule the prepared roving is first passed through several pairs of revolving rollers, then forward to a set of spindles, supported in a movable carriage in which they are free to rotate on their axes simultaneously with the outward or inward movement of the carriage.

The draft is chiefly obtained between the feed and delivery rollers. The additional and final draft, technically known as "spindle draft," is obtained between the nip of the front rollers and the spindles. The spindle

draft in the worsted mule is small, usually about 5% of the total.

The draft or gain, of the spindles on the rollers, is primarily determined by the rate of the outward traverse of the carriage which also incidentally determines the mechanical disposition of the fibres in the spun thread. The predetermined amount of twist to be put into the yarn is accomplished by the rotation of the spindles during the period of the outward traverse of the carriage.

The winding of the yarn on to the spindles and the building of the cop are performed during the period occupied by the carriage in making the return journey.

108. Essential details of the Worsted Mule.

The mule spinning frame, though one of the most interesting and complex machines in the whole range of textile mechanics, cannot for lack of space, and its relative unimportance in worsted spinning, be exhaustively considered in this treatise.

The essential features of the worsted mule are as follows :—

Fig. 350 is a side elevation of the head stock and carriage. It shows the latter in contiguity to the feed rollers and head stock, preparatory to commencing to spin.

The dotted lines show the position of the carriage at the end of the " draw."

Fig. 351 shows a side view of part of the headstock, together with the carriage, spindles, and quadrant lever at the end of the " draw."

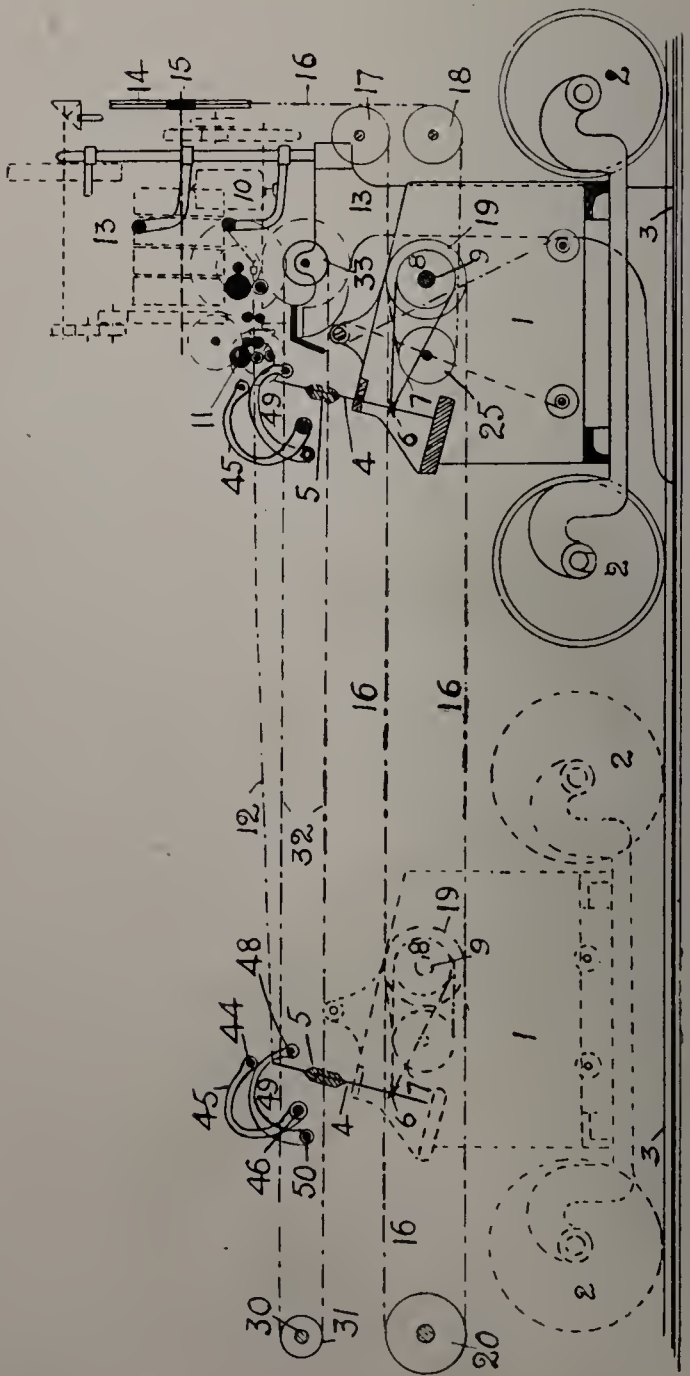
14
15
16
17
18
13
10
19
33
8
9
1
2
3
11
49
45
5
4
6
7
25
12
32
48
44
46
50
30
31
20

Fig 350.

Similar numerals in each diagram refer to corresponding details of mechanism.

1 indicates the carriage, 2 the wheels on which it is mounted and 3 the rails on which it is free to traverse to and from the headstock. The spindles are shown at 4, a portion of the cop on same at 5, the spindle whorl at 6, the driving band at 7, the tin or driving cylinder at 8 and the shaft with which it is compounded at 9.

The position of the rovings in the creel is indicated at 10, the feed and delivery or drawing rollers at 11 and the drawn thread at 12 stretched in suspension between the nip of the front rollers and the top of the spindles. The headstock from which all parts of the mule are operated is shown at 13. A rim pulley 14, mounted upon a shaft 15 denominated the rim shaft communicates rotary motion to the Cylinder shaft 9 through an endless rope 16 which traverses from the rim pulley 14 partially around a guide pulley 17, then forward to and round a tension pulley 20 from which it returns and passes round a pulley 19, on cylinder shaft 9 and a small pulley 25 from whence it is directed by a second guide pulley 18 back to the rim pulley 14. By the foregoing arrangement the spindles 4 can be rotated irrespective of their varying distance from the front rollers.

The outward traverse of the carriage 1 is uniform and during this traverse the spindles rotate with uniform velocity and insert the required twist into the yarn. On the return journey the traverse of the carriage and

the speed of the spindles must be varied to suit the varying diameter of the cop.

By suitable arrangement of mechanism the rim pulley and shaft 15 may be rotated at varying speeds for the outward and return journeys of the carriage.

109. Varying Speed of the Spindles.

The constantly required varying speed of the spindles during the period of winding the yarn on to the cop is obtained by an additional piece of mechanism, denominated the quadrant, Fig. 351.

It consists essentially of a quarter circle of spur wheel 26, pivoted on shaft 27 suitably supported and free to oscillate about its centre.

Combined with the quadrant is an extension or lever arm 28. A rack pinion 29, compounded with a shaft 30, free to rotate clock and counter clockwise, gears into and oscillates the quadrant 26 with its arm 28 to and from the direction of the carriage.

Compounded with the rack pinion 29 and shaft 30 is a small rope pulley 31 around which a rope 32 passes in spiral form. One end of rope 32 passes over a pulley 33, adjusted in the headstock, to the rear of the carriage at 34 and the other end goes direct to the front of the carriage at 35.

Supported and free to rotate within the longitudinal centre of the quadrant arm 28 is a screw shaft 36 at the top of which is fastened a small hand lever 37.

Mounted upon the screw shaft 36 is a small nut forming part of a bracket arm 38 to which a chain or

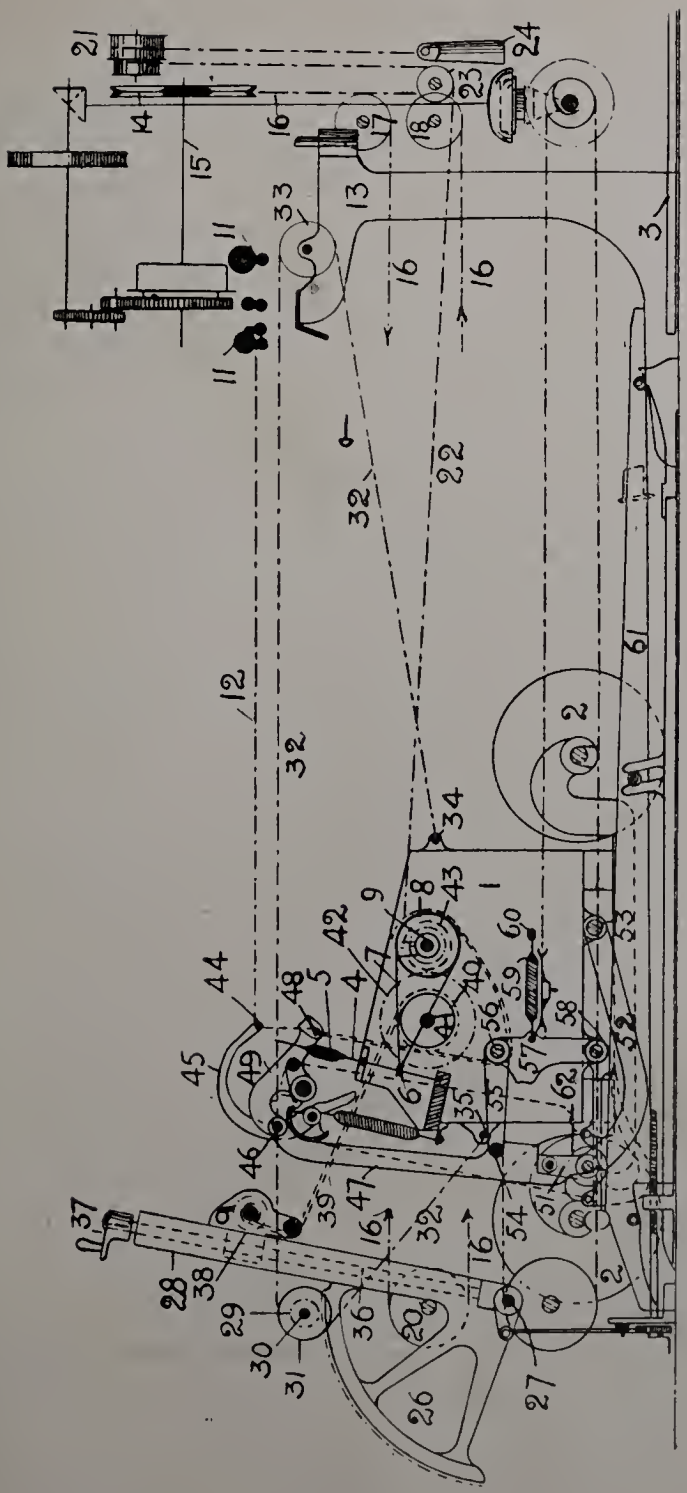

Fig. 351.

rope 39 is attached and in turn carried to a small scroll pulley 40 fast on shaft 41. A spur pinion 42 on shaft 41 drives a smaller spur pinion 43 on the cylinder shaft 9.

Immediately before commencing a new spin the bracket nut 38 is adjusted near to the base of the quadrant arm 28. It may be raised gradually, through the rotation of the screw shaft 36 which may be rotated by the hand wheel 37 at will, or automatically if desired.

With the gradual ascent of the bracket arm 38 the chain 39 is drawn from the scroll pulley 40 through which action the necessary greater speed is transmitted to the spindles.

110. Winding the Yarn on to the Cops. When the rollers cease the delivery and the carriage reaches the limit of its "draw," the twisting operation has diminished the length of the drawn and twisted thread which is then stretched at tension between the nip of the front rollers and the spindles, in a horizontal plane, midway between the faller and counter faller wires. Before the actual operation of winding can be performed, the excessive tension on the thread must be reduced so as to permit the faller wire to descend, and the counter faller wire to ascend, and between them effectively exercise their functions to control the slackened thread during the actual operation of winding the yarn and building the cop to the required size and shape.

The process of slackening the stretched thread is performed by mechanism usually defined as the "backing

off motion," the function of which is to reverse the rotation of the spindle and unwind a short length of yarn from the cops.

The *faller* wire shown at 44 is carried by the free arm of a bent lever 45 pivoted on a shaft 46, in turn supported in a lever 47. The counter faller wire 48 is carried in the free arm of the bent lever 49, pivoted on the shaft 50 also carried in the lever arm 47.

The lever 47 is attached to the carriage 1 through the small swivel link 51 and the large swivel link 52 combined with the carriage 1 by a stud and bracket 53.

The lever 47 is further attached in frictional contiguity with a cam or cop building rail, through the following details :—a stud 54 in lever 47 supports one end of a link arm 55 which is in turn linked by a free stud 56 to a depending arm 57 carrying an antifriction roller 58 near its base which is kept in rolling contact with the cop building rail. The arm 57 is attached to the carriage 1 by the spiral spring 59 and the stud 60 as shown. The cam or cop building rail 61 is constructed to suit the size and shape of the cop required. An antifriction bowl 62 carried near the base of the lever 47 is also kept in rolling contact with the copping plate 61 by the action of which the bowl rises and falls.

The influence of the copping rail or the reciprocal movement of the lever 47 is transmitted through connections described to the faller and counter faller wires the function of which is therefore to direct and wind the yarn on to the cop in accordance with its required size and formation.

111. General Functions and Sequence of Operations.

The functions of the Mule may be divided into four periods :—

1st. This period includes delivery, drafting and twisting. The operations involved in this period are :—rollers deliver roving ; carriage is drawn out at a constant rate ; the spindles revolve at a definite speed, and the faller and counter faller wires are retained in position.

2nd period—arrestation. The driving gear to the rollers is detached, the carriage and spindles are stopped and the fallers are prepared to engage the yarn.

3rd period—backing-off. The rim shaft and spindles are reversed, faller depressed, counter-faller raised, fallers are locked.

4th period—winding. Rollers are stationary, carriage runs in at a variable speed and spindles revolve at a varying speed.

The worsted mule requires a more delicate adjustment than any other machine in the sequence of drawing operations because practically every contributing factor necessary to the production of a good yarn has to be performed in the final operation of mule spinning. It is most readily affected by atmospheric changes for which reason it offers a large field for the exercise of the human element and experience.

An important feature of mule spinning is that during the operation of drafting and twisting the thin places in the attenuated material naturally receive the maximum twist, whilst simultaneously the thick and soft places are freely attenuated to approximately the same degree of fineness.

CHAPTER XLIX.

TWISTING.

112. *The "universal" automatic stop motion.* 113. *Control of roller spindles.* 114. *The Detector "cradle."* 115. *The trap board.* 116. *Action of the mechanism.* 117. *Tension on driving bands to the spindles.* 118. *Fancy twist yarns.*

THE term "twisting" as used in worsted spinning denotes the processes by which two or more single threads are doubled and a reasonable amount of twist given to the folded yarn. Usually two single threads are twisted together for the purpose of producing a yarn sufficiently strong to be used for warp in weaving.

Practical experience and frequent tests have demonstrated that the breaking load and "stretch" increase up to a limited point with increased amounts of twist given to the yarn; beyond a certain point further amounts of twist cease to produce an increase in stretch or strength. It therefore behoves the manufacturer to ascertain as correctly as possible the minimum amount of twist that will yield the best results in stretch and strain before the yarn fractures. Further, the characteristics of some woven cloths are such that they do not require to be manufactured from yarns which contain the maximum amount of twist and strength, and in

such cases it is possible to effect a saving in yarn cost,

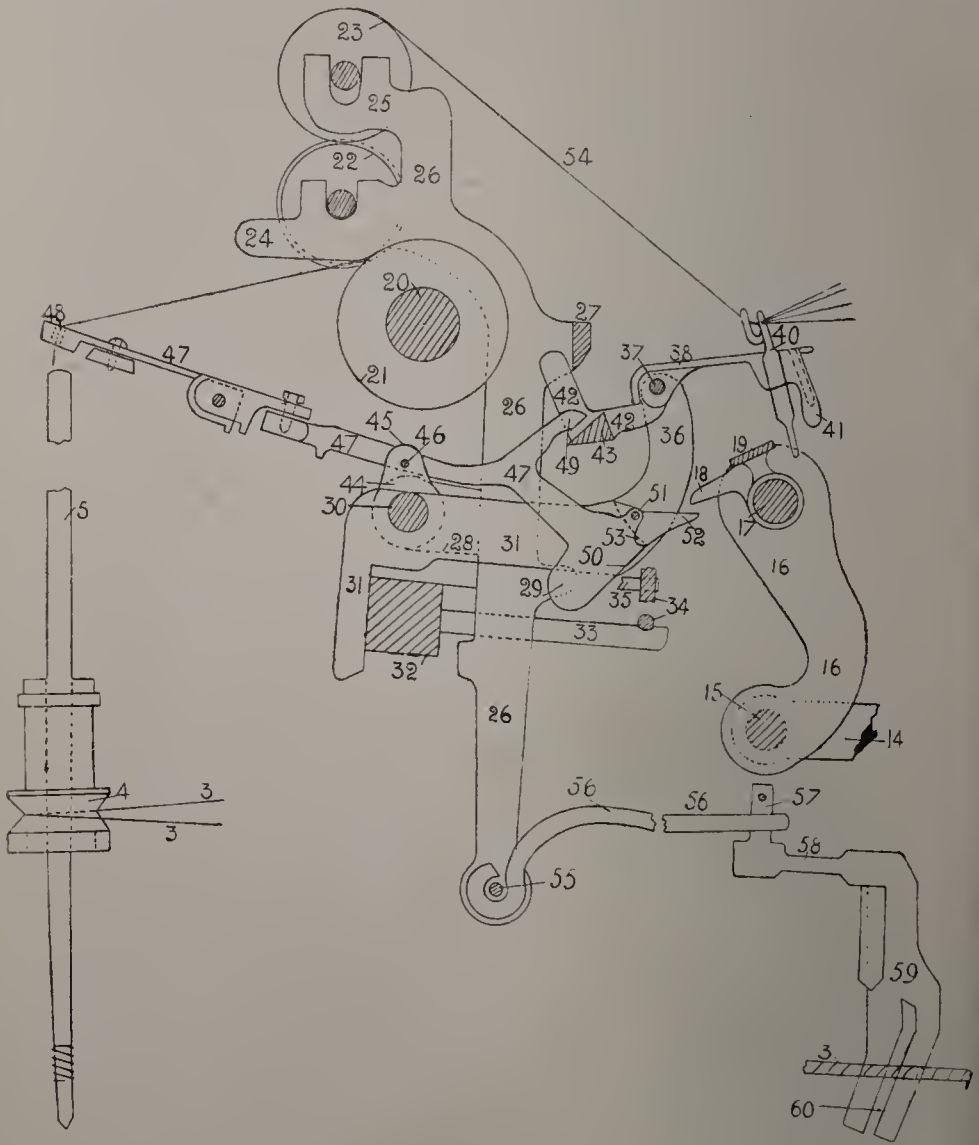

Fig. 352.

since, as is well understood, the productive results of

spinning and twisting vary inversely to the amount of twist which the yarn contains.

Three and four-fold yarns are sometimes used for specific types of woven cloths as well as for ornamental effects in other specialities, including fancy twisted effects produced by different kinds, qualities, colours and sizes of yarns. Three and four-fold worsted yarns are also extensively used in the hosiery trade.

It should be noted that although two-fold yarns are those principally used for worsted warps, single yarns suitably twisted are sometimes employed for this purpose, especially for soft-handle dress goods; but such yarns require the exercise of much ingenuity and industry to make them suitable for weaving.

In order to produce these two or many-fold yarns specific types of machinery have been adopted, as described in the following pages.

The Twisting Frame.

The constructional details, method of driving the spindles and rollers, and principle of inserting the twist into the yarn are virtually the same as for throstle spinning. The only factor to which special attention might be directed is one of the many devices adopted in practice for automatically stopping the spindles and delivery rollers immediately any one of the threads breaks or the combined thread in front of the rollers unduly balloons. The immediate stoppage of the delivery rollers and spindles facilitates the proper piecing up of broken threads.

112. The "universal" automatic stop motion.

Fig. 352 shows in sectional elevation the essential details of mechanism as used on Prince Smith's twisting frame. Fig. 353 is an elevation on a reduced scale of the driving details. Fig. 354 is a part plan showing the mechanism designed to remove the spindle

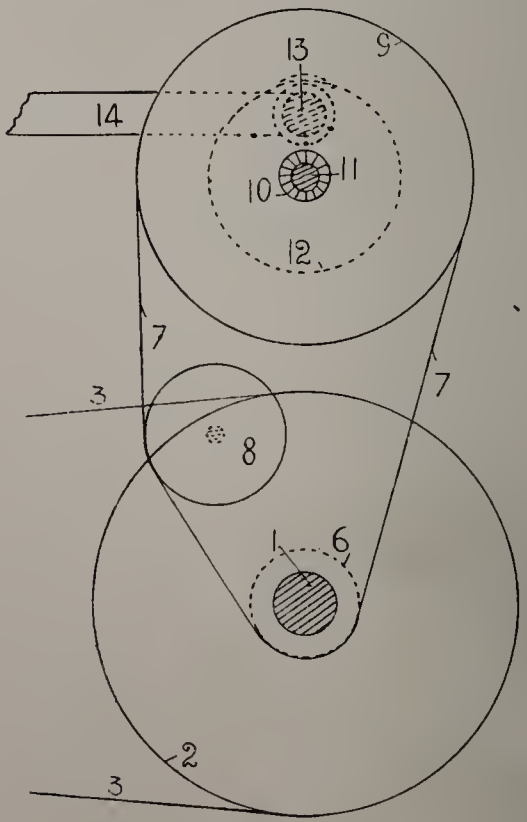

Fig. 353.

band from a rotary to a stationary pulley and thereby immediately arrest the rotation of the spindle. Fig. 355 is a part elevation of Fig. 354. The same numerals in each diagram refer to corresponding details.

113. Control of roller spindles.

1 is the frame or cylinder shaft, 2 the cylinder, 3 the driving band or tape, 4 the whorl, 5 the spindle. A small flange pulley 6 is compounded with the cylinder shaft 1;

Fig. 355.

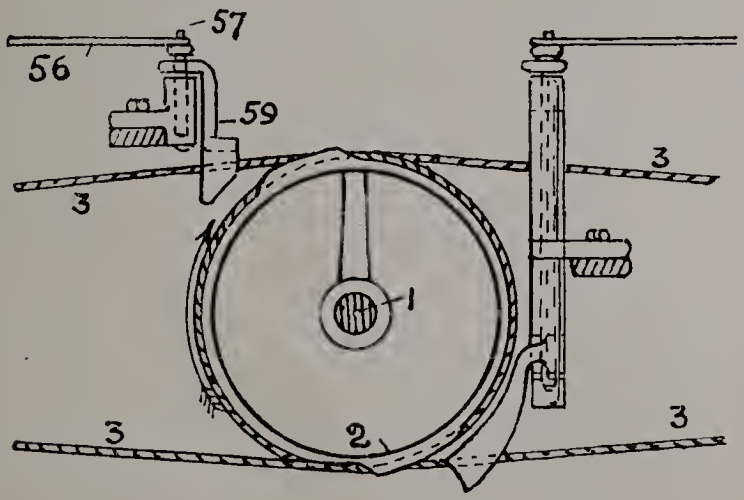

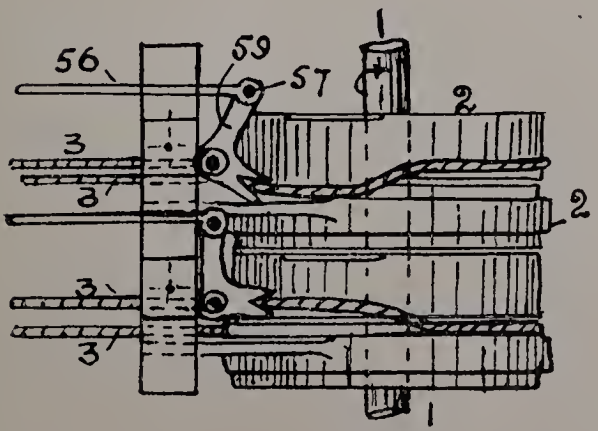

Fig. 354.

a belt 7 communicates motion from the pulley 6 and passes in rotary contact with a small adjustable tension

pulley 8 forward to a pulley 9 having an extended sleeve 10 which is freely mounted on a stud shaft 11. Compounded with the extended sleeve 10 is a small disc wheel 12 in which a stud 13 is adjusted out of centre ; a link rod 14 combines the stud 13 with a loose stud 15 which in turn passes through the free arm of a bent lever 16 compounded with a shaft 17 (Fig. 352). The shaft 17 extends the full length of the twisting frame, being supported between the gables of the machine between which it is free to oscillate. Compounded with the shaft 17 are two short levers 18 and 19. The function of these, as subsequently described, is to stop separately or conjointly the rotary motion of the rollers and spindles. The bottom roller shaft is shown at 20, and the boss or bottom roller at 21. Loose rollers 22 and 23, contiguous to each other, are suitably supported in bracket arms 24 and 25 respectively, both of which form part of a long and complex lever 26 : additional parts of this lever are shown at 27 which is a small projection butting out at right angles so as to form a " shoulder " on the lever 26 ; 28 and 29 are extensions to the left and right respectively of lever 26, which is pivoted on a fixed stud 30, and on which its normal tendency is to swivel counter clockwise.

114. The Detector " cradle."

The stud 30 is carried in a bracket 31 set screwed to a permanent cross rail 32, which extends the full length of the machine. 33 is a projecting arm at right angles to, and forming part of the rail 32. The arm 33 and its duplicate support a rod 34 (detached and shown in part plan) on which are placed a series of adjustable lever arms 35. The function is to bring, when desired, the small lever

arms 35 into such a position that they will immediately stop all the spindles and arrest the rotary action of the rollers. The arm 36 is an extension of the bracket 31. A stud 37 in arm 36 supports and acts as a pivot for the detector cradle 38. The cradle is free to oscillate slightly about the stud 37 : it is recessed for the reception of one or more thread guides 40, which also act as "detectors" to detach the roller 22 from rotary contact with roller 21 immediately the thread breaks. 42 indicates an arm or extension of the cradle 38. 43 is a projection at right angles to and forming part of the extension 42.

115. The trap board. Freely mounted upon the stud 30 is a sleeve 44 having a projecting part or nose 45, which in turn supports a small pin or stud 46. On the stud 46 a "trap lever" 47 is pivoted. The trap lever is a compound of several detachable parts, as indicated. The left free arm is provided with an "eye" 48, through which the folded yarn may pass forward towards the spindle and bobbin. An upper free arm 49 is shaped so as to be parallel with the inclined face of projection 43 of lever arm 42. A weighted extension of the trap lever 47 is shown at 50, carrying a stud 51 on which is freely mounted a small triangular lever 52. The heel of lever 52 normally rests in close contact with a recess 53 formed on the extension 50. The lever 52 can therefore be first oscillated only counterclockwise ; afterwards it is operated, as subsequently detailed, by the short lever 18. The threads 54 pass through the detectors 40, over roller 23, between the nips of 22 and 23, and 21 and 22, through the guide "eye" 48 in the trap board 47 to spindle 5.

116. Action of the mechanism. When the rollers 22 and 23 are in operative contact with the boss roller 21 the twisting operation is being performed; the upper extension 42 is locked with the projection 27 of lever 26; the trap lever 47 is held down by the tight and twisting thread 54 as it passes through the guide eye 48. The triangle lever

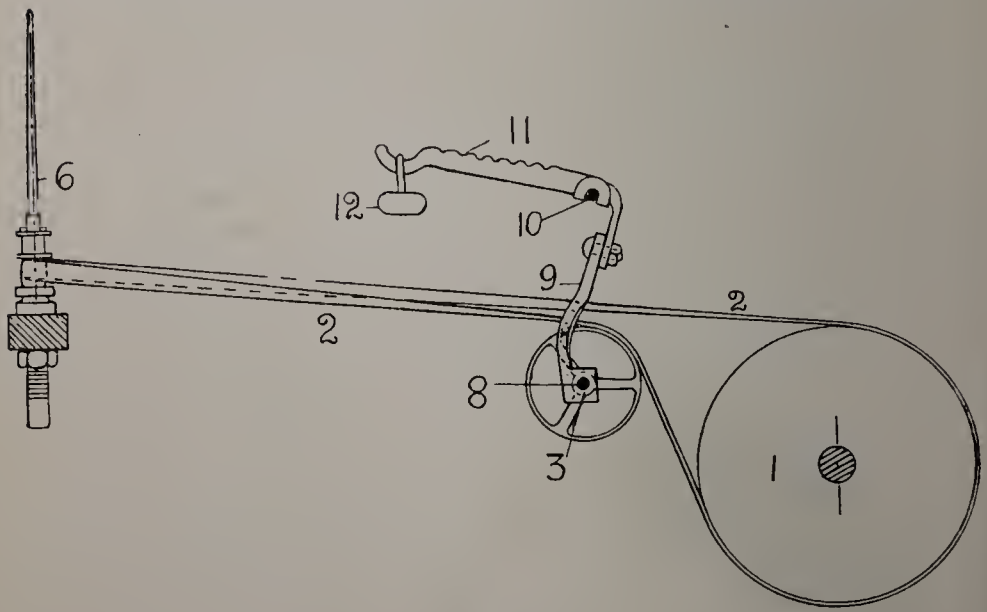

Fig. 356.

52 is above the face of lever 18, and the detector guide 40 is held up by the threads 54 so that its base is clear of the operating lever arm 19. If, however, the thread in front of the roller is slack, the trap lever assumes a position similar to that in the illustration: then with the constant oscillation of shaft 17, the lever arm 18 presses on the upper side of lever 52, and through its action the trap lever 47 is rocked clockwise until its arm 49

descends into pressure contact with the projection 43 sufficiently to depress the lever arm 42 out of contact with the projection 27 and thereby liberate the lever 26, so that it will assume its natural position of gravity, by rocking counterclockwise so as to release the roller 22 from frictional contact with the boss roller 21, and simultaneously by the pressure of stud 55 in lever 26, operates through the details 56 to 60 inclusive to transfer the driving band or tape 3 from the rotary to a stationary portion of cylinder 3. See Fig. 354.

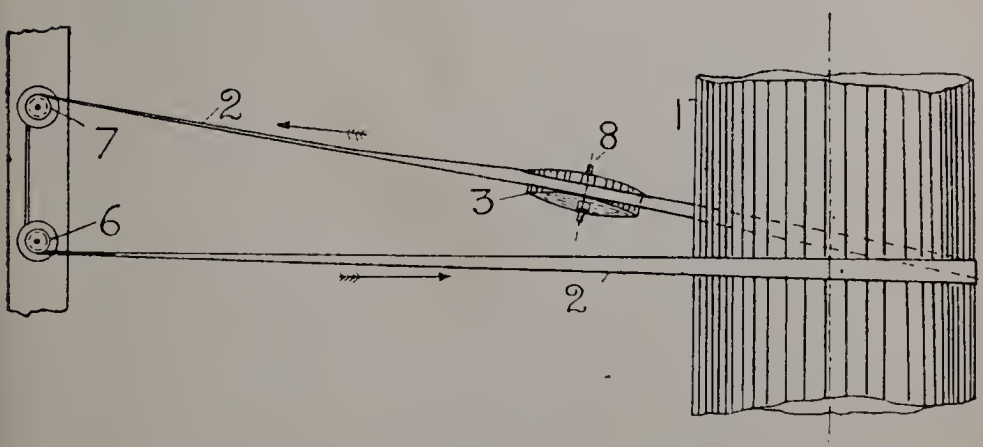

Fig. 357.

117. Tension on driving bands to the spindles. Figs. 356 and 357 show an elevation and plan respectively for driving two spindles simultaneously in an ordinary two-fold and non-automatic twisting frame. 1 is the cylinder, 2 the driving band, 3 the tension pulley, 6 and 7 the spindles and 8 the axle of the tension pulley which with pulley is free to rotate in suitable bearings of the perpendicular arm 9 of lever 11 pivoted on stud 10. The lever 11 is adjustably counterpoised by a weight 12. The direction of rotation is shown in Fig. 357.

118. Fancy Twist Yarns. Fig. 358 shews in perspective a few of the varieties of Fancy twist yarns.

(*a*) *Clouded Yarn*, is of alternate variation of thickness and number of turns per inch. It is composed of two threads one of which is a warp twist and the other a soft spun thick thread. The finer thread is passed through the front rollers which deliver the yarn regularly while the thick thread is passed through the back rollers which have an intermittent motion, and then through the front rollers. The first rollers are therefore allowed to draw out the soft sliver to the point of breaking, and since the twist always runs into the thinnest places, a yarn is produced which is not only of varying diameter but which contains an irregular number of turns—usually from 3 to 20 per inch.

(b) *Loop Yarn.* In yarns of this description each thread is passed through a separate pair of rollers. The loop is produced by running the rollers at different speeds.

(c) *Knicker Yarn* is produced by mixing about 8 or 10% of silk or wool noils of various colours with the combed wool. The operation is performed in the carding machine, after which the slivers are passed through the drawing machine, but no gills are used as they would interfere with the even distribution of the noils.

(d) *Crewel Yarn.* The single yarns of which this is composed are each twisted very hard, and afterwards the two-fold yarn receives about the same amount of

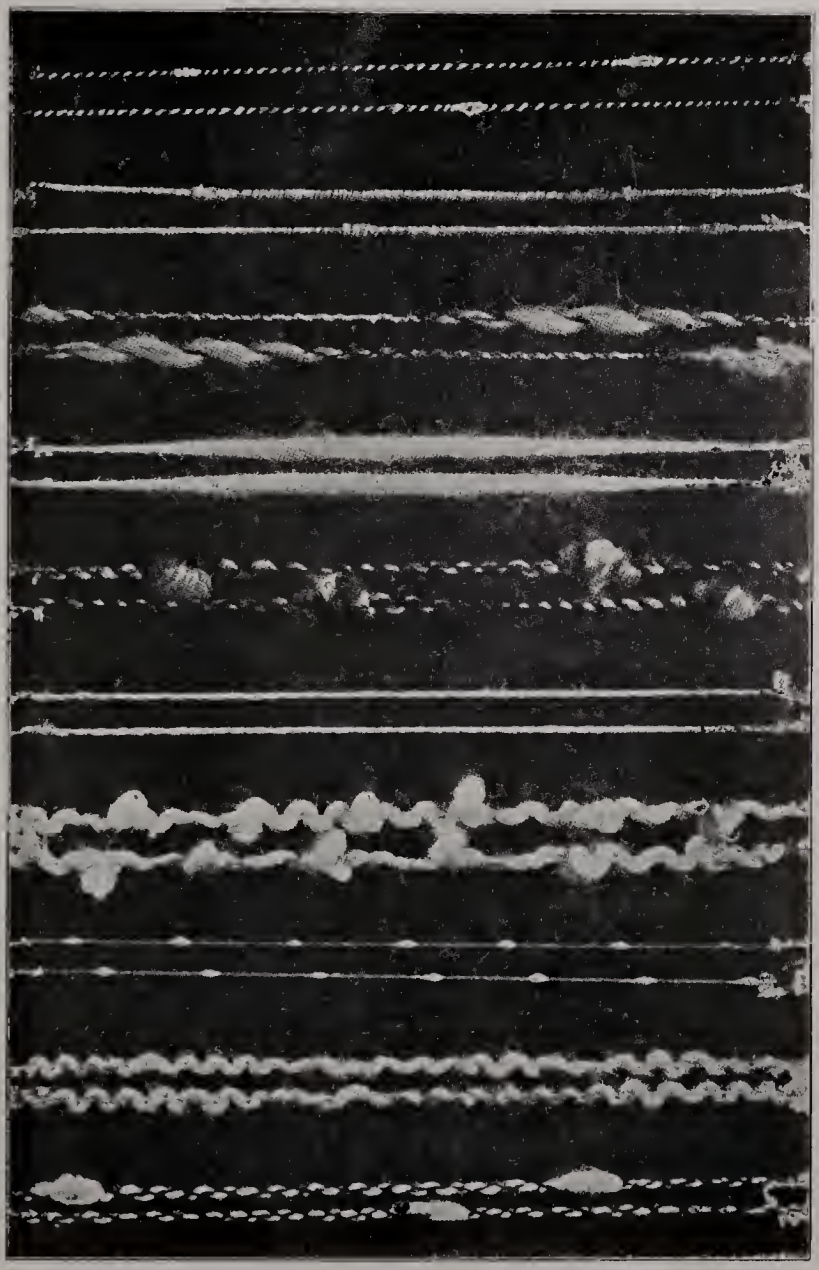

Fig 358.
FANCY TWIST YARNS.

twist, and presents a pearly appearance. The following is a typical example for a 2/16s. worsted :—

Single yarns 9 turns per inch.
Two-fold ,, 8–8½ ,, ,,

(e) *Corkscrew Yarn* is obtained by twisting a thick and a finer yarn together, generally about 10s and 12s worsted, one of the threads being twisted slacker than the other.

((f) *Spiral Yarn* is made by twisting a fine two-fold twist thread with a thick soft yarn. The following is an example :—

Fine thread 2/60s Botany.
Thick thread, 1/8s Botany.

(g) *Gimp Yarn* is composed of a thick thread (hard twisted) with a finer thread. In twisting the two-fold yarn, the finer thread is held tighter than the thick thread, thus causing the thick thread to wrap round the fine one.

(h) *Chain Yarn* is composed of three-fold yarn, two strands of which are twisted in opposite directions around a loosely twisted thick thread.

(i) *Bead Yarn* is the product of twisting together two yarns, one having a right and the other a left twist ; the result being that the twist is taken out of one while it is simultaneously put into the other. The length of the untwisted yarn is increased, while that of the other is increased, and the combined attenuation and contraction produce a wavy appearance.

CHAPTER L.

WARPING AND SUPPLEMENTARY PROCESSES.

119. *Reeling and grossing.* 120. *Warp winding.* 121. *The warping "mill."* 122. *The "Heck" motion.* 123. *The Bank.* 124. *Warping process.* 125. *Variable sectional warping.* 126. *Incline plane sectional warping mill.* 127. *Productive results.*

THE preparation and spinning of worsted yarns literally terminates with the operation of spinning in the case of single yarns, and twisting in the case of two or more folded yarns. There are however intermediary processes between spinning and weaving which may be considered as *supplementary* to spinning or *preparatory to* weaving. These processes include winding, reeling, grossing, warping and beaming. They are all comparatively simple with the exception perhaps of winding and warping, to which subject the remaining few pages of this treatise will be devoted.

119. Reeling and grossing.

In the worsted trade a large quantity of folded yarn is reeled into hank form and afterwards made into convenient sized bundles suitable for scouring, or dyeing, or for storage, transit, or export. The yarn is made into hank form by winding on to a reel or "swift." This comprises a central shaft, supported in suitable bearings

and free to revolve, with which is compounded a series of light radial iron arms having at their ends a number of smooth longitudinal bars or staves of wood, from 1″ to 1½″ thick by 2″ to 2½″ deep. When complete, the series of bars forms a circle usually of 1½ to 2 yards circumference. Originally the worsted reel was 1 yard in circumference, and it is upon this size of reel that the system of counting worsted yarns is based.

The bundles of yarn are usually made to weigh 5 or 10 lbs. each, and are generally reduced by power pressure to a convenient size for subsequent handling and storage.

120. Warp Winding. Warp winding is an essential operation for all classes of Textile warp yarns. Worsted warp is chiefly wound from twisters' bobbins or hanks on to double-headed warpers' bobbins or in "cheese" on cylindrical or cone shaped barrels of wood or paper. Warpers' bobbins are filled by frictional contact against a rotating "drum." "Cheeses," parallel or cone shaped, are built by means of a rotating "split drum" or other well known cross winding device.

Fig. 359 is a line diagram which shows a front elevation of a "drum" winding machine.

Fig. 360 is a front elevation of the lateral traverse guide and its relation to the winding drums.

Fig. 361 is a side elevation of the same details.

Fig. 362 is a transverse section through the winding drum and warper's bobbin, in frictional winding contact.

Fig. 363 illustrates the same details but with the bobbin temporarily removed from winding contact with the drum. This facilitates the "piecening up" of the broken or new threads and obviates any tendency of the yarn to become "glazed" by running too long in frictional contact with the drums after the supply of yarn has been intercepted.

The same letters in the five diagrams refer to corresponding details. A is the line shaft, B the drum on same, C the driving belt, D the fast and loose pulleys on the frame shaft E, on which are secured the winding drums F. The warper's bobbin G rests normally in frictional contact with the face of the winding drum F the surface speed of which therefore represents the calculated or maximum rate of winding. The yarn in hank form is adjusted on the "swift" or reel H from which it is passed through the guide and "clearer" I to the double flanged bobbin G.

The guide and clearer I is compounded with a straight steel bar J suitably supported and free to reciprocate laterally a distance equal to the inside measurement of the bobbin G. A stud K, link L and a stud M connect the slide bar J with a lever N pivoted at O. The lever N carries an antifriction bowl P which is kept in rolling contact with a heart wheel Q through the medium of the chain and weight R. The heart wheel Q is keyed fast to the end of a supplementary shaft S which is suitably supported at the side of the machine. A worm wheel T fast on shaft S receives continuous rotary motion from the worm U compounded with the shaft E which carries the winding drums F. V shows one end of the bobbin

Fig. 362.

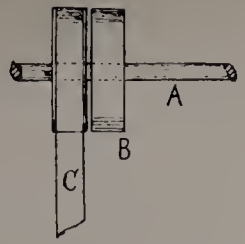

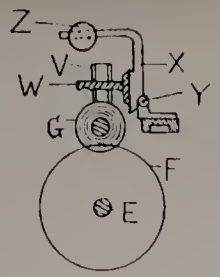

Fig. 363.

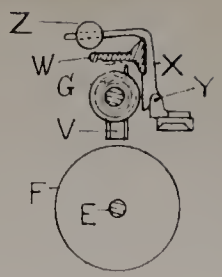

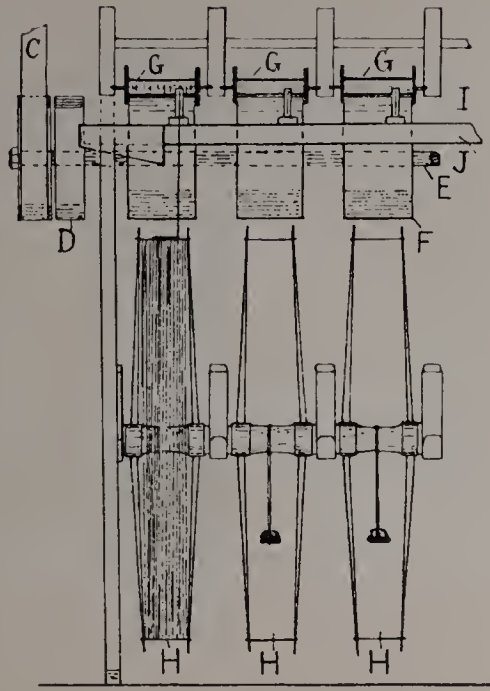

Fig. 359.

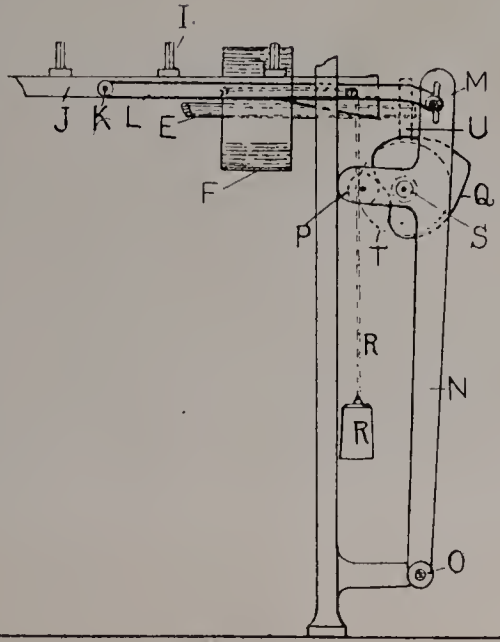

Fig. 360.

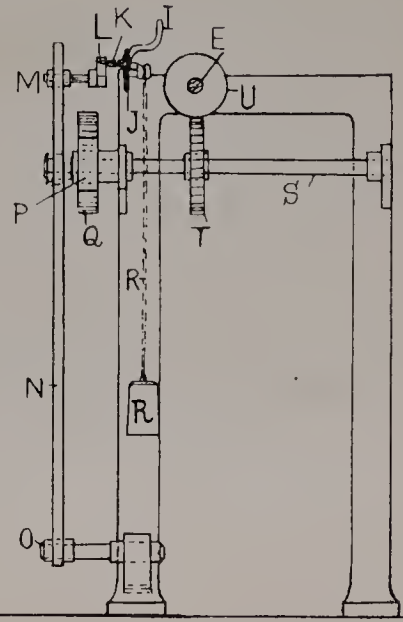

Fig. 361.

holder; W is a short arm compounded with the bobbin holder V and rests in frictional contact with the inside or "face" of a bell crank lever X pivoted to the frame fixture at Y and adjustably weighted at Z.

Experience teaches that one of the best ways of thoroughly understanding the various details of any given mechanism is the solving of numerous problems involved in the construction and action of its mechanism. Further, the knowledge and ability to solve these various problems, contribute to the more efficient production per machine together with a knowledge of its relative value when compared with its contemporaries and in its relation to any previous or subsequent machines with which it is interdependently connected.

Speed and Productive Problems.

Example 1. The line shaft A (Fig. 359) makes 140 revolutions per minute; the diameter of the drum B on same is 12 inches; the pulley D on frame shaft E is 10 inches and the warping drum is 9 inches in diameter. Calculate (a) the speed of the winding drums F in revolutions per minute and (b) the quantity in gross of worsted hanks which each winder attending 18 drums can wind in 48 hours. Allow 35% for stoppages of all kinds.

Data:—The loss of time from all causes when taken over a period of six or twelve months for the complete plant of warp winding may be anything from 30 to 50% according to the type, state of repair and management of the machinery.

The local loss of time for a specific machine, if reckoned over a short period, say one week, may fall as low as 25% governed by the foregoing factors together with the human element or winder.

SOLUTION :—

(a) Speed of winding drum =

$$\frac{\text{speed of shaft A} \times \text{diameter of drum B.}}{\text{Diameter of pulley D.}} = \frac{140 \times 12}{10} = 168 \text{ revs.}$$

(b) The number of gross of worsted hanks wound by each winder per week =

$$\frac{\left\{\begin{array}{c}\text{Surface speed}\\ \text{in yards per hour}\\ \text{of Winding}\\ \text{drums G.}\end{array}\right\} \times \left\{\begin{array}{c}\text{Number}\\ \text{of}\\ \text{Winding}\\ \text{drums.}\end{array}\right\} \times \left\{\begin{array}{c}\text{Effective}\\ \text{speed of}\\ \text{Winding.}\\ \text{drums.}\end{array}\right\}}{\text{Number of yards in one gross of hanks.}}$$

$$= \left(\frac{168 \times 60}{1} \times \frac{9 \times 22}{36 \times 7}\right) \times \frac{18}{1} \times \left(\frac{48 \times 65}{100}\right) \times \frac{1}{560 \times 144}$$

$$= 58{\cdot}4 \text{ gross of worsted hanks.}$$

EXAMPLE 2. The speed of a line shaft is 140 revolutions per minute, the driving drum on same is 18 inches in diameter and the pulley on the winding drum shaft is 14 inches diameter. The winding drum is 10 inches and the barrel of warper's bobbin is $1\frac{1}{4}$ inches in diameter which is increased to 4 inches when filled with yarn. Ascertain the revolutions of the bobbin per minute (a) at the startand (b) at the finish.

DATA.

Then, since the principle of winding is by frictional contact of the winding drum and the warper's bobbin, the speed of the bobbin will be greatest at the start, after which it will be automatically retarded following each layer of yarn wound on the bobbin ; its slowest speed will therefore be reached when the bobbin is full.

SOLUTIONS.—

(a) Initial Revolutions of bobbin

$$= \frac{\text{Revs. per min. of winding drum} \times \text{dia. of winding drum.}}{\text{Diameter of barrel of bobbin.}}$$

$$= \frac{140 \times 18}{14} \times \frac{10}{1\frac{1}{4}} = 1440 \text{ revs. per min.}$$

(b) Final Revolutions of bobbin

$$= \frac{\text{Revs. per min. of winding drum} \times \text{dia. of winding drum}}{\text{Diameter of bobbin when full.}}$$

$$= \frac{140 \times 18}{14} \times \frac{10}{4} = 450 \text{ Revs. per min.}$$

EXAMPLE 3. The inside measurement of a warping bobbin G (Figs. 359, 360, 361) is 5 inches. The stroke of the heart wheel Q is 4 inches. The perpendicular distance of the centre of the antifriction bowl P in lever N is $26\frac{3}{4}$ inches from the fulcrum O. Find the distance in inches which the centre of the stud M must be adjusted in the lever N from the stud O so as to impart the exact amount of traverse to the thread guide I. The worm wheel T contains 45 teeth and the worm U is of the *single* order.

SOLUTION.—

Then, traverse of bar J and thread guide I

$$= \frac{\text{(Stroke of heart wheel Q) (Distance of centres M. O.)}}{\text{Perpendicular distance of centres P. O.}}$$

Let x=distance apart of centres M. O.

$$\text{Then } \frac{4x \text{ inches}}{26\frac{3}{4} \text{ inches}} = 5 \text{ inches} = \text{Traverse of I.}$$

Multiply across

$$\text{Then } 4x = 5 \times 26\tfrac{3}{4} = \frac{5 \times 107}{4}$$

$$\therefore x = \frac{5 \times 107}{4 \times 4} = \frac{535}{16} = 33\tfrac{7}{16} \text{ inches.}$$

= The distance which the centre of stud M must be adjusted to give the required traverse of 5 inches to the thread guide I.

WARPING AND BEAMING.

The worsted spinner delivers his warps in chain or ball or on the beam, as required by the manufacturer, at virtually the same price. In practice there are numerous methods by which warps are treated preparatory to weaving, from which the following are selected.

121. The warping "mill." This type of machine has long been in use and is still extensively employed to prepare the warp in chain or ball form. From this state the warp may be run on to a weaver's beam, usually on a "Yorkshire dressing frame," or it may be previously treated and dyed to any required colour.

Fig. 364 is an elevation which shows the main features of the warping mill. Fig. 365 is a plan view of the same. Corresponding numerals in each diagram refer to similar details of mechanism. 1 is an upright shaft suitably supported in a vertical plane from the floor of the room as shown. 2 is an iron boss compounded to the vertical shaft 1. 3 indicates radial bars of equal length which combine the boss 2 with a series of vertical ribs 4, (8 to 10 feet in height). 5 shows one of a series of inner wooden rings, adjustably compounded with the ribs 4 at suitable distances apart. Additional vertical ribs 4A are interposed, at about 12 inches apart, and fastened to the inner ring 5 and its duplicates. The vertical ribs 4 form the periphery of the swift, near the base of which is adjustably fastened a short piece of wood 6 containing three wooden pegs 7. On to these the warp yarns are subsequently fastened for the start, and to serve as a "foot lease" a like piece of wood 8 with pegs 9 is fastened near to the top of vertical ribs 4. The pegs 9 are used to form a single lease of the warp threads. A large bevel wheel 10 is compounded with the vertical shaft 1 near its base. The teeth of a second bevel wheel 11 intermesh with those of the bevel 10. The bevel 11 is fast on a horizontal shaft 12, with which a bevel 13 is also compounded. A bevel wheel 14 fast on and near the base of a short vertical shaft 15 gears into and drives the bevel 13. The shaft 15 is supported from the floor of the room and is free to rotate in either direction; a bevel wheel 16 is compounded with it, and its teeth intermesh with those of bevels 17 and 18. The bevel 17 is fast to a short cross shaft 19 on which

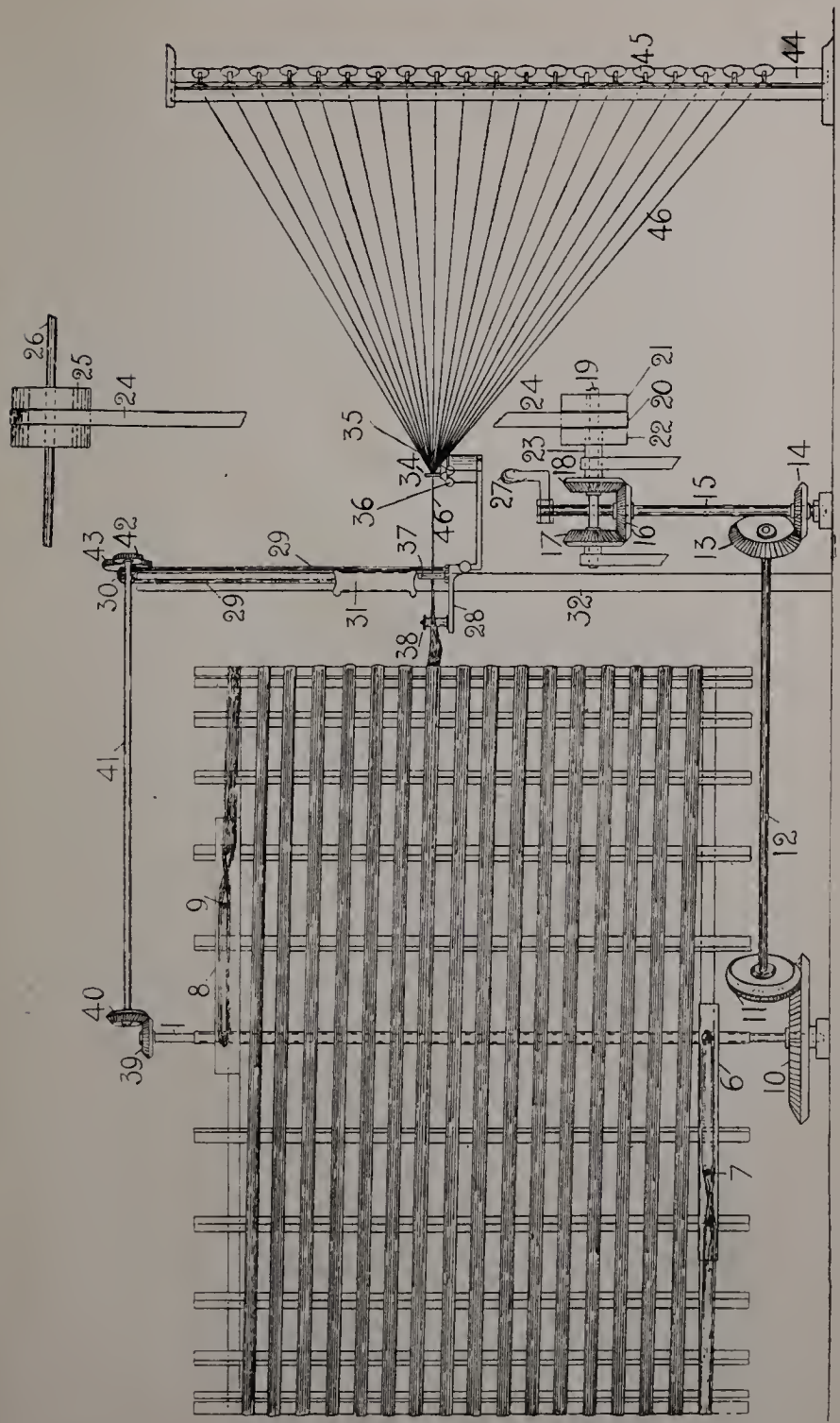
44
45
46
26
25
24
35
34
36
37
46
24
19
21
20
22
23
18
27
17
16
15
14
13
43
42
29
30
29
31
28
38
32
41
12
9
8
40
39
11
10
6
7

Fig. 364.

are placed the fast and loose pulleys. 20 is a loose pulley and 21 a pulley fast on shaft 19. 22 is a pulley compounded with a sleeve 23, to which the driving bevel wheel 18 is also attached. The sleeve 23 is loose on shaft 19. A belt 24 links the driving pulleys with a drum 25 on line shaft 26 from which the initial power motion is received. A hand lever 27 may also be fixed at will to the vertical shaft 15, for manual working of the machine when the engine is stopped.

122. The "Heck" motion.

The "heck" is designed to receive and control the warp threads in their passage from the warper's spools to the swift. It consists of a frame work 28 suspended by a chain 29 passing over a suitably supported roller 30 and fastened to a heavy counterpoise weight 31. The heck is free to reciprocate in a vertical plane between two upright pillars 32 and its duplicate. Mounted upon the heck framework is a needle frame 33 in which is placed a single row of short steel rods 34, denominated needles, provided with eyelets through which one or more threads, as required, may pass forward to the swift. The needles 34 are equally spaced at about four per inch, and are arranged in two separate bed rails to the ends of which are attached small rings 35 and 36 for the purpose of alternately raising the rails with their odd or even set of needles, so as to form a lease in the warp as required. A series of porcelain tubes 37, or adjustable steel pegs, are equidistantly placed in a vertical plane on the heck frame 28. The warp threads from the needles pass in groups of 5 or 10 threads: in the needle frame 33 their width is reduced to a narrower

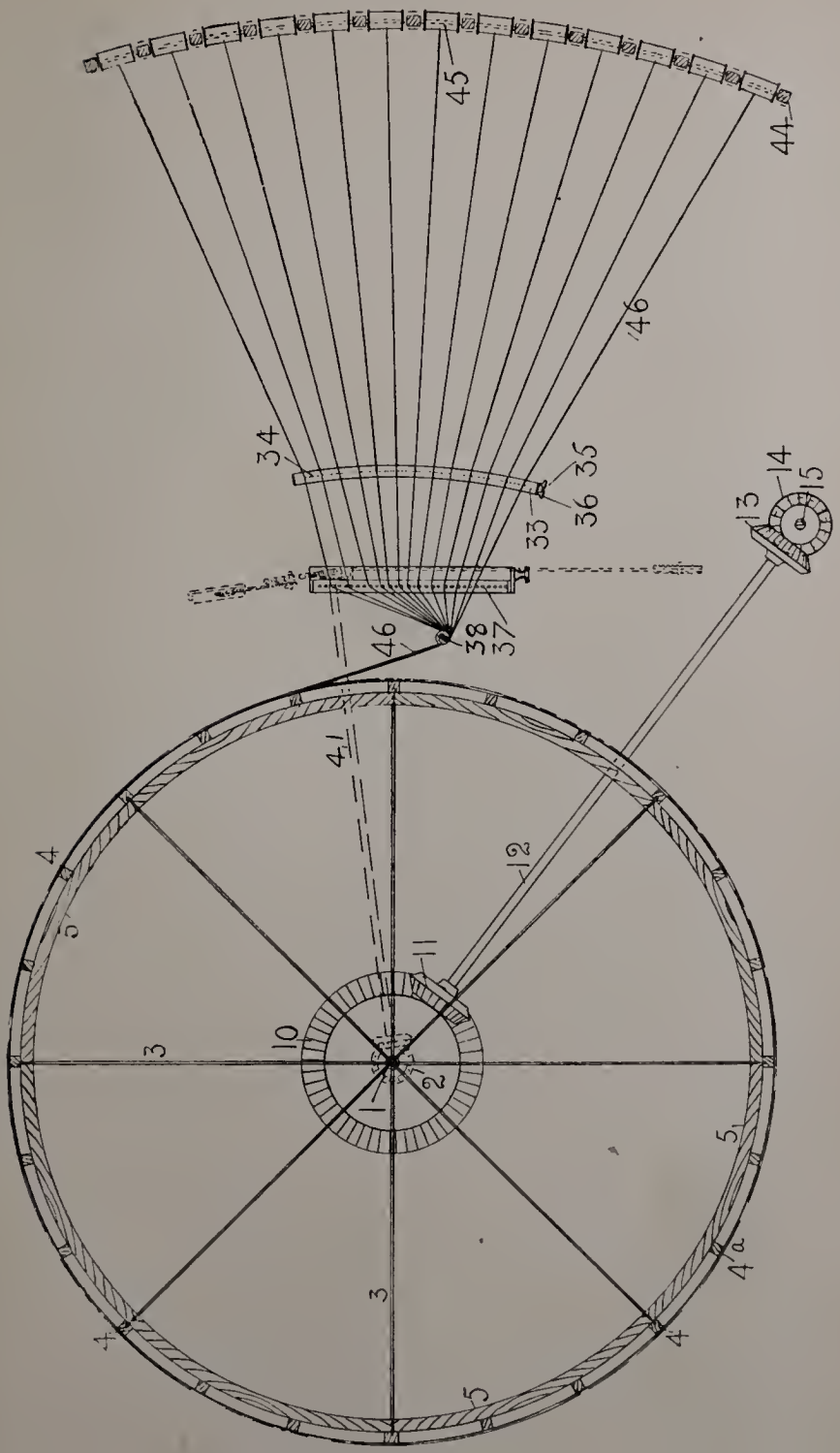

Fig. 365

band of threads, and from here they all pass collectively to the swift in frictional contact with a small rotary flanged pulley 38 supported in a vertical plane by the heck framework 28.

The reciprocation of the heck is controlled from the vertical shaft 1. A bevel wheel 39 fastened to the shaft 1 gears into and drives a bevel 40 fast on the top horizontal shaft 41. Compounded with shaft 41 is a spur pinion 42 whose teeth intermesh with and drive a wheel 43 compounded with the chain roller 30. The heck rises and falls alternately with the reversing of the rotation of the swift.

123. The Bank. The warper's bobbins are arranged on pegs in a creel, denominated the bank. The bank is constructed to hold from 100 to 400 bobbins. A portion of the bank is indicated at 44, the warper's bobbin at 45, and the warp yarn at 46.

124. Warping process. The individual warp threads 45 are separately threaded through the eyelets 34, then converged between the pegs 37 and further condensed to pass in contact with the rotary roller 38. The heck 28 is lowered until the combined warp threads are directly opposite the foot lease pegs 7, to which they are next attached. The belt 24 is then moved on to the fast pulley 21 which through the mechanism described rotates the swift in a given direction, at the same time drawing the warp threads off the bobbins and laying them on to the periphery of the swift. Simultaneously the heck gradually rises and distributes the yarn over the full height of the swift,

or according to any desired length of warp required. The reverse rotary motion is imparted to the swift by moving the belt 24 from the fast pulley 21 to the sleeve pulley 22. The relative movements of the swift and the heck can be varied at will to produce the spiral disposition of the coils of warp threads for different sizes of yarn, according to the judgment of the warper. The circumference of the swift varies from 10 to 25 yards.

The calculations involved in making warps may be readily understood from the following worked example :—

EXAMPLE 1. A worsted warp contains 5760 ends. It is required to be made 480 yards long.

Calculate (a) the number of single journeys from the "foot" to the "single" or top lease, and (b) the number of revolutions which 20 yards "mill" must make. Number of ends in bank = 240.

$$\text{(a) Single journeys} = \frac{\text{ends in warp}}{\text{ends in bank}} = \frac{5760}{240} = 24.$$

$$\text{(b) Revs. of mill} = \frac{\text{Length of warp}}{\text{Circe. of mill}} = \frac{480}{20} = 24.$$

SECTIONAL WARPING.

Various devices are in use for preparing warps in sectional form, and afterwards combining the sections to produce the required width on the weaver's beam. In some instances the warps are prepared or wound on to narrow drums of definite width, the flange of which are invariably deep. Sectional warping machines of modern invention are constructed to be varied at will.

125. Variable sectional warping.

In Robert Brown's Sectional Warping and Beaming machine the width of the section may be varied at will. Briefly the principle consists of a central shaft suitably supported and free to rotate : upon this central shaft, thin metal disc plates are adjusted and set screwed at lateral distances apart to suit any required width of section. The product of the widths and the number of sections give the width ot the warp yarn on the weaver's beam. At a convenient radial distance from the central shaft a series of thin iron rods pass through perforations in the disc plates. These rods form the core on which the warp yarn is wound : they are concentric and rotate with the central shaft. The yarn from the " bank " for each section is fastened to one of the concentric rods. The central shaft and rods are then rotated a predetermined number of revolutions to produce the required length of warp. For the next and each successive section, the warp threads from the bank are moved laterally into position directly opposite the several divisions, when the operation of warping is repeated. From the above combined sections the warp yarn is wound directly on to the weaver's beam.

126. Incline plane sectional warping mill.

In the " Knowles " type of warping machine the axle of the mill is supported in a horizontal plane. The complete warp is built up in sectional widths against an *incline plane*. This consists of wedge-shaped pieces of wood, one of which is clamped to the external surface of each respective horizontal stave or spoke.

The circumference of the swift is 5 yards 2 inches and its width is 5 to 6 feet.

The creel is shaped thus

. It is constructed to hold a reasonable number of warper's bobbins—400 is a normal capacity, made up as follows :—

12 rows on the side A, by 16 rows in height = 192 bobbins.
12 ,, ,, B, ,, ,, = 192 ,,
1 row ,, C, ,, ,, = 16 ,,

Total No. of bobbins in bank = 400

The number of ends put up in the bank depends upon its holding capacity, width of weaver's beam, and predetermined number of sections. For a large order and a regular run, the bank is usually filled to its maximum capacity. Each section is therefore at its maximum width for the given "set." For a small order and a limited quantity of yarn, fewer bobbins are available and the width of the section is relatively narrow.

Fig. 366 is a front elevation of a part of one of the spokes of the warping mill together with the incline plane or wedge, against which the first section is gradually constructed.

Fig. 367 is an end view of the same details together with the mechanism which serves to clamp the wedge to the spoke. A indicates the part spoke ; B the wedge ; C a clamp pin passing through the wedge B ; D a three-sided clamp constructed with two hooks which fit over the clamp pin C as shown. E is a scroll shaft which

passes through a threaded part of the base plate of clamp D. It is constructed with a small hand wheel F which may be rotated manually at will to tighten the adjusted wedge B.

The width of each section may be varied up to about 9 inches to suit the number of threads per inch required on the weaver's beam, the width of the warp on which is equivalent to the product of the number and width of the sections. The number of warp threads required to be put up in the bank must therefore be equivalent to the number of ends required in each section.

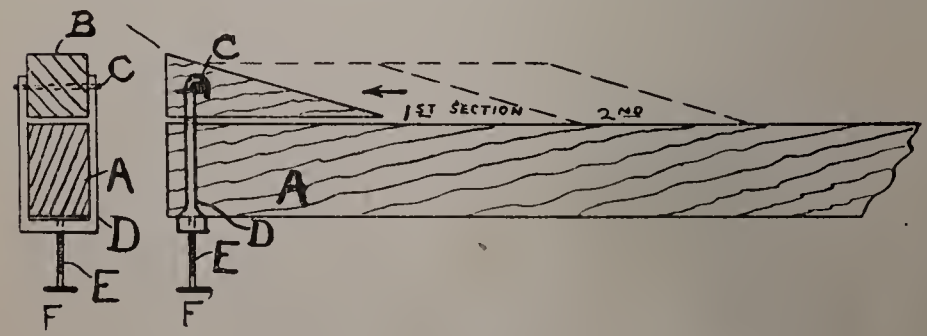

Fig. 367. Fig. 366.

The warp threads taken from the bank are passed through a reed of required fineness and width: the threads are "leased" and suitably fastened to the warping mill, which is then set in rotary motion.

At the end of each complete revolution of the swift, the reed and carriage controlling the warp threads are automatically moved very slightly in a lateral direction to the left. By this operation the incline plane of the wedge B is gradually covered until the requisite length of warp has been wound on to the swift—see first

section, Fig. 366. The lease is again taken and the ends severed and secured until required for subsequent beaming.

For the second and subsequent sections, the distributing reed and carriage are moved laterally to the right a distance equal to the width of the section.

The foregoing operation of warping is repeated for each section until the complete number of sections have been wound on to the swift.

The warps can be made to almost any length, being restricted chiefly by the holding capacity of the weaver's beam.

A measuring device with an automatic stop motion is attached to each machine.

The completed warp is wound on to the weaver's beam, during which operation the swift rotates in the reverse direction and the warp beam moves laterally a slight distance for each rotation until the full width of the section has been traversed and all the warp removed from the swift.

Warping Problems.

Example 1. Required a 2/40's worsted warp to contain 3400 ends, 8 cuts each of which must measure 96 yards and be distributed 60″ wide on the weaver's beam. Find the maximum width of section, number of ends up in bank, and number of sections in each warp width.

Then 10 sections are the smallest number which will divide into 3400 ends and 400 the maximum number of ends up in the bank, thus :—

$$\text{Ends in bank} = \frac{3400 \text{ ends in warp}}{10 \text{ sections}} = 340.$$

$$\text{and width of section} = \frac{60'' \text{ wide on beam}}{10 \text{ sections}} = 6''.$$

EXAMPLE 2. Warp 2450 ends, 768 yards of 2/40. Width of warp on beam 50 inches. Find ends in bank and width of section.

$$\text{Then ends in bank} = \frac{2450}{7} = 350.$$

$$\text{and width of section} = \frac{50}{7} = 7\tfrac{1}{7}''.$$

EXAMPLE 3. 2/40 warp, 3080 ends and 8 cotton ends for edges, 60″ wide on beam, and 768 yards long. Find ends in bank and width of section.

$$\text{Then ends in bank} = \frac{3080+8}{8} = 386.$$

$$\text{and width of section} = \frac{60}{8} = 7\tfrac{1}{2}''.$$

N.B.—382 ends warp and 4 ends cotton on first and last sections.

EXAMPLE 4. 2/40's warp, 860 ends, 864 yards long and 27″ wide on beam.

$$\text{Then ends in bank} = \frac{860}{3} = 288.$$

$$\text{and width of section} = \frac{27}{3} = 9''.$$

127. Productive results. When the banks contain from 350 to 400 ends, and long warps are being made corresponding to the examples given, about 12 to 13 warps averaging 800 yards or approximately 2400 lbs. can be produced in each week of 48 hours.

INDEX.

Automatic cap doffer mechanism, 814
Automatic "flyer" doffer, 799.
Automatic Stop motion. The universal, 842.

Ballooning, 744.
Bank, The, .
Bobbin Creel, The, 727.
Bobbin, Differential speeds of the, 660.
Bobbin, Increase in diameter of the, 658.
Bobbin and Spindles, Independent driving of the, 668.
Bobbin Winding, Modifying factors of, 657.
Builder Mechanism, Action of the reciprocating, 680.
Builder Mechanism, Construction of the reciprocating, 676 and 764.
Builder Mechanism, Functions of the, 674.
Builder Mechanism, Scaife's, 766.
Builder problems, 773.
Builder, Reciprocal traverse of the, 659.

Cap and Bobbin removal mechanisms, 820.
Cap and Doffer mechanism, Action of automatic, 824.
Cap and Doffer mechanism, details of automatic, 814.
Cap and Doffer mechanism, sequence of operations, 824.
Cap Spindle and driving tubes, 742.
Cap Spinning, 739.
Cap Spinning machine details, draft and twist, 740.
Carriers, The object and function of, 595.
Change wheels "Lifter," Short method of finding, 787.
Cone drawing, 657.
Cone drawing driving details, 668.
Cones, Driving of the, 670.
Cops, winding on, in Mule Spinning, 836.
Counts of Yarn, Continental, 791.
Counts of Yarn, Worsted, 790.
Counts of Yarn, Yorkshire skeins, 792.

Detector Cradle, The, 844.
Differential Bobbin Winding, 657.
Differential speeds of the bobbin, 660.
Differential mechanisms, 682.
Differential mechanisms, Epicyclic wheels, 682.
Differential mechanisms, various types of, 692 and 706.
Doffing mechanism, Action of, 808.
Doffing mechanism, Sequence of operations, 808.
Draft, Amount of, 590.
Draft, Calculations of, in drawing boxes, 630

Draft, Calculation of, in roving boxes, 633.
Draft, Hargreaves' Spinning Jenny, 587.
Draft in Cap spinning, 740.
Draft, in gill drawing, 628.
Draft, Spindle, 586.
Draft Spindle and distaff, 586.
Draft, The Crompton Mule, 588.
Draft, The one-thread wheel, 586.
Drafted spun yarns, Spindle and roller, 589.
Drafting, 585.
Drafting alternately, in opposite directions, 593.
Drafting, Continuous roller, 588.
Drafting, Defective, 592.
Drafts, Preparing and drawing—compared, 596.
Drag and winding, 599.
Drawing, back and front rollers, 591.
Drawing, Botany, plan of single set, 610.
Drawing, Botany, plan of double set, 611.
Drawing, English and French, 724.
Drawing box, knocker-off mechanism, 578.
Drawing boxes, Calculation of twist in, 638.
Drawing boxes, Calculation of speed of spindles in, 641.
Drawing boxes, Construction and action of the, 568.
Drawing boxes, Creel feed mechanism, 557.
Drawing boxes, Feeding from tops to gill, 557.
Drawing boxes, Relative productive capacity, 647.
Drawing boxes, Relative productive capacity, examples, 655.
Drawing boxes, Swing Creel feed, 583.
Drawing boxes, Table V, details average set Botany, 614–6.
Drawing boxes, Table VI, details average set Long Wools, 617–618.
Drawing, French, 711.
Drawing machines and operations, 553.
Drawing, nips and spindles, 591.
Drawing, Number of operations, 604.
Drawing, Object and function of, 550.
Drawing, Table I, Long Wools, 607.
Drawing, Table II, Crossbreds, 608.
Drawing, Table III, Botany Wools, 609.
Drawing, Table IV, Cashmere Wools, 610.
Drawing, Twist in worsted, 598.
Drawing, Varieties of treatment for special lots, 605.
Drawing, Worsted, Gilling in, 553.
Drawing, Worsted, Two systems of, 552.
Driving of the Cones, front roller, differential mechanism, 670.
Driving of the lifter racks, 672.
Driving of the spindles and bobbin, 668.

Eccentric and double annular spur wheels, 700.
Epicyclic and oscillating toothed wheels and laws governing same, 689.
Epicyclic wheels, data governing, 682.
Epicyclic wheels, train of three wheels, 685.

Fancy Twist yarns, 848.

Feed, arrangement of, for Reducers and Dandy Rovers, 584.
Feed Creel Mechanism, 557.
Feed Swing Creel, 583.
Fly Doffer Mechanism, details of, 800.
Fly spinning—rove to bobbin, 737.
"Flyer" Doffer, Automatic, 799.
"Flyer", Object and function of the, 597.
French drawing, 711.
French v. English Drawing, 724.
Front rollers, driving of the, 670.

Gill box, Calculations on speed of spindles, 637.
Gill box, Two spindle, draft in, 634.
Grossing, Reeling and, 849.

Heck motion, The, 860.

Knocker-off mechanisms—Drawing box, 578.
Knocker-off mechanisms, Object and function of, 563.
Knocker-off mechanisms, Three wheel or candlestick, 565.

Lifter change wheels, Short method of finding, 787.
Lifter or builder mechanism, 575.
Lifter racks, driving of the, 672.

Mechanical Doffer, 799.
Mule, Worsted essential details, 831.
Mule, worsted, Functions of the, 830.
Mule, worsted, Varying speed of the spindles, 834.
Mule, worsted, Winding yarns on to the cops, 836.

Oscillating double bevel on an inclined axis, 696.
Oscillating toothed wheels, Laws governing, 689.

Preceding volumes, Abstract of, 549.

Ratch, The, and its functions, 593.
Reeling and grossing, 849.
Ring spindle details, 749.
Ring spinning, 746.
Ring spinning frame, 747.
Rollers, French and English compared, 728.
Rove, Weight and draft of, 793.
Rover, Dandy, Calculations of twist in, 642.
Roving box, Calculation of speed of spindles in, 646.
Roving box, draft, 633.
Roving, English and French, 727.
Roving reduction problems, 620.
Roving, Testing the weight of, 620.
Roving, Weights of, for 70s top, 619.

Scaife's Builder Mechanism, 766.
Scroll and heart wheel shaft, Rotary mechanism to, 770.
Scroll and heart wheel shaft, Rotary and reciprocating action, 771.
Speed of spindles in Gill boxes, 637.
Speed of spindles in Drawing boxes, 641.
Speed of spindles in Mule Spinning, 834.
Speed of spindles in roving boxes, 646.
Speeds of front rollers and Scroll Shaft, Ratio of, 779.
Speeds of scroll shaft and heart wheel, Ratio of, 784.

Spindles and bobbin, Independent driving of the, 668.
Spindles, Cap, 742.
Spindles, Ring, 749.
Spindles, Tension on tapes driving the, 753.
Spinning, Cap, 739.
Spinning, Difficulties due to varying diameters of wool fibres, 730.
Spinning, Fly—Rove to bobbin, 737.
Spinning frame, Ring, 747.
Spinning frame, Twist gearing on, 756.
Spinning, Ring, 746.
Spinning, Throstle, 734.
Spinning, Throstle—Machine details, 735.
Spinning, Worsted, Object and function of, 729.
Stop motion, The universal automatic, 842.

Tapes, Tension on, 753.
Tension of driving bands to the spindles, 847.
Throstle spinning, 734.
Throstle spinning, Machine details, 735.
Tops, Reduction problems, 620.
Trap board, The, 845.
Twist, Amount of, in worsted yarns, 733.
Twist and its influence on the yarn, 730.
Twist, Calculation of, in two-spindle gill box, 634.
Twist Calculation of, in drawing boxes, 638.
Twist, Calculations of, in Dandy Rover, 642.
Twist gearing on Spinning frame, 756.
Twist in Cap spinning 740.
Twist in slubbing and roving—Table, 600.
Twisting, 839.
Twist yarns, Fancy, 848.

Warping and beaming, 857.
Warping mill, 857.
Warping mill, Incline plane sectional, 864.
Warping, Variable sectional, 863.
Warp winding, 851.
Weight and draft of rove, 793.
Winding bobbin, Modifying factors of, 657.
Winding and drag, 599.
Winding yarn on to cops in mule spinning, 836.
Woollens—Yorkshire skeins, 792
Worsted counts of yarn, 790.
Worsted mule, essential details of, 831.
Worsted mule, Functions, 830.

Yorkshire skeins, Woollens, 792.

F. KING & SONS LTD., PRINTERS, HALIFAX.

Worsted Preparing & Spinning--Vol. 1.

(Second Edition.)

By **BRADBURY & BUCKLEY.**

CONTENTS.

PART I.

RAW MATERIAL, VARIETIES AND PROPERTIES.

Chap.	Subject.	Page.
i.	Varieties of sheep and sources of supply... ...	1
ii.	Influence of climate and pasture...	20
iii.	Impurities in wool...	30
iv.	Influence of chemical re-agents	40
v.	Physical structure of the wool fibre	47
vi.	Physical Properties of the wool fibre and influence of structure	58

PART II.

CLASSIFICATION, WASHING AND DRYING.

vii.	Classification of wool	90
viii.	Wool sorting	98
ix.	Wool scouring and washing	106
x.	Wool washing machinery and processes... ...	117
xi.	Wool Drying	151
xii.	Worsted and Woollen yarns—a comparison ...	169

PART III.

WORSTED PREPARING.

xiii.	Gilling	174
xiv.	Drafting in gill boxes	182
xv.	Double or two-screw gill boxes	199
xvi.	Oiling wool...	210

PART IV.

WORSTED CARDING.

xvii.	Opening processes and removal of loose and vegetable impurities	220
xviii.	Object and process of worsted carding	230
xix.	Card clothing	243
xx.	Setting, speed, functions and grinding of the various rollers	256

6/6 net.

F. KING & SONS LTD., Publishers, HALIFAX.

Worsted Preparing & Spinning--Vol. 2.

By F. BRADBURY.

CONTENTS.

		PAGES.
	CHAPTER XXI.	
Intermediate Processes between Carding and Combing		273–288
	CHAPTER XXII.	
Wool Combing		289–301
	CHAPTER XXIII.	
The Noble Comb...		302–324
	CHAPTER XXIV.	
The Modern Noble Comb		325–344
	CHAPTER XXV.	
Feeding the Noble Comb		345–361
	CHAPTER XXVI.	
Dabbing Mechanisms		362–390
	CHAPTER XXVII.	
Drawing-off Mechanisms		391–411
	CHAPTER XXVIII.	
Sliver Funnels, Can Coiler, Circle Cleaning and Stop Motion		412–434
	CHAPTER XXIX.	
The Set Over and Theory of Pinning		435–451
	CHAPTER XXX.	
Cooper's Noble Comb		452–464
	CHAPTER XXXI.	
The Nip or Lister Comb...		465–479
	CHAPTER XXXII.	
The Square Motion or Holden's Comb...		480–489
	CHAPTER XXXIII.	
The Heilman Comb (Schlumberger Model)		490–514
	CHAPTER XXXIV.	
Finishing Gill Boxes		515–531
	CHAPTER XXXV.	
Miscellaneous Problems		532–539

6/6 net.

F. KING & SONS LTD., Publishers, HALIFAX.

Worsted Preparing & Spinning--Vol. 3.

By F. BRADBURY.

CONTENTS.

		PAGES.
	CHAPTER XXXVI.	
Worsted Drawing		549–584
	CHAPTER XXVIII.	
Fundamental Principles of Drawing and Spinning ...		585–603
	CHAPTER XXXVIII.	
Drawing Operations and Reduction Calculations ...		604–626
	CHAPTER XXXIX.	
Calculations on the Production of Drafts and Twists		627–646
	CHAPTER XL.	
Relative Productive Capacity of the Drawing Boxes		647–656
	CHAPTER XLI.	
Differential Bobbin Winding or " Cone Drawing ...		657–681
	CHAPTER XLII.	
The Differential Mechanisms		682–710
	CHAPTER XLIII.	
French Drawing...		711–728
	CHAPTER XLIV.	
Worsted Spinning		729–762
	CHAPTER XLV.	
Lifter Mechanism, Spinning and Twisting		763–789
	CHAPTER XLVI.	
Worsted Yarn Calculations		790–797
	CHAPTER XLVII.	
Automatic Doffers		798–829
	CHAPTER XLVIII.	
Worsted Mule Spinning...		830–838
	CHAPTER XLIX.	
Twisting		839–849
	CHAPTER L.	
Warping and Supplementary Processes		850–869

7/6 net.

F. KING & SONS LTD., Publishers, HALIFAX.

Crown 8vo., Cloth.

CALCULATIONS IN YARNS AND FABRICS.

Eighth Thousand. *3rd Edition, Revised and Enlarged.*

By F. BRADBURY.

This book contains over **300** pages of useful, practical and technical information for

MERCHANTS, SPINNERS, MANUFACTURERS, TEXTILE WORKERS AND STUDENTS.

IT CONTAINS CHAPTERS ON:—

		Pages.
1.	Various systems of counting yarns	13-41
2.	Resultant and average counts	42-61
3.	Relative weights and cost of twist yarns ...	62-78
4.	Buying and selling flaxes	79-86
5.	Blending of textile fibres	87-95
6.	Costing of yarns	96-117
7.	Weight and cost of warp and weft yarns in commercial form	118-132
8.	Winding, warping and beaming problems ...	113-150
9.	Set systems or various methods of counting reeds and healds	151-171
10.	Quantities and weight of warp and weft in plain and fancy fabrics	172-192
11.	Weight and cost of woven fabrics	193-227
12.	The construction of woven fabrics (A).	228-243
13.	The construction of woven fabrics (B).	244-259
14.	The construction of woven fabrics—angle of curvature considered (C)	260-278
15.	Conditioning or the standard allowances of moisture in textile materials	279-291
16.	Calculations involved in the analysis and reproduction of woven fabrics	292-307

The "TEXTILE MERCURY":—

"... The volume contains an abundance of useful information, and should be in the possession of students, teachers, managers, and all persons having to deal with the matters of which it treats."

The "MANCHESTER GUARDIAN":—

"... An interesting and useful chapter is devoted to the testing of textile materials and the standard allowance for moisture in each kind.... Mr. Bradbury's book supplies a kind of information useful to textile manufacturers which, so far as we know, has not been published in anything like the abundance presented in his "Calculations."

THOROUGHLY PRACTICAL AND UP-TO-DATE.

6/6 Net.

F. KING & SONS, Ltd., Publishers, HALIFAX.

Demy 8vo. 356 illustrations

Jacquard Mechanism & Harness Mounting

BY F. BRADBURY.

CONTENTS

OUT OF PRINT

Part I.

THE EVOLUTION OF FIGURE AND J

Chap.		
i.	Origin and growth of pattern design	25
ii.	Fundamental principles of weaving	-32
iii.	Hand loom weaving—Treadle shed	2-34
iv.	The draw loom ...	45-53
v.	British efforts to supplement or s	54-60
vi.	French efforts to supersede th	61-66

F

MODERN J 67-258

vii.	The single lift Jacqua ...	67-83
viii.	Double lift Jacquard ...	84-116
ix.	Cross border Jacqua ...	117-130
x.	Twilling Jacquards ...	131-159
xi.	Compound drivin ...	160-171
xii.	Pressure and sp ...	172-190
xiii.	Gauze or leno	191-209
xiv.	The gauze ree	210-222
xv.	The Swivel	223-244
xvi.	Index and	245-258

G. 259-315

xvii.	Prir ting	259-268
xviii.	Pr ting...	269-302
xix.	F	303-315

IV.

DESIGNING, C EPEATING AND LACING. 316-347

xx.	Design prepa amping	316-323
xxi.	Card repeating	324-329
xxii.	Card lacing and lac chines	330-347

The Yorkshire Observer.

" . . . Mr. Fred Bradbury has dealt specifically with a branch of the weaving industry which has been too long neglected. . . . . It is especially welcome on the score of its thoroughness in treatment."

12/6 net.

F. KING & SONS, Ltd., Publishers, HALIFAX, Yorks.

Demy 8vo

Carpet Manufacture.

By F. BRADBURY.

This book contains over **300** pages of ... ful and invaluable information, including **243** illustrations ... line diagrams, together with half tones and coloured ...

Its numerous illustrations, general ... mation on the structures, properties and ... ling the possibilities of colour and de... their relative durable properties, are ... to dealers and all persons who bu... pets.

THE ONLY WO...

Contains Chapters on . .

...ER
...ILE, AXR.
...JGS AND SQUARES
INGRAIN, SCOTCH AND KIDDERMINSTER.

OUT OF PRINT

...have occasionally come across books on weaving ...ain sections have been devote... to carpet manu... ...nave never, as far as our kn...wledge serves us known ...ich devotes the whole of its contents to this special subject... ...f the book is decidedly good and very clear. . . . Different makes of ... ...y described in the work, the special mechanisms employed in their proc... ...ig clearly illustrated."

"The Publishers' Circular."

". . . In addition to its practical value for manufacturers it will be useful to students in art schools in towns where textiles are not made. It often happens that admirable designs on paper are useless for expression in cloth simply because the artist has not understood the limits within which he must work to make his design suitable for reproduction."

TO BE OBTAINED FROM

F. KING & SONS, LTD., HALIFAX, YORKS.

Cone Drawing

— ILLUSTRATED — WITH NUMEROUS DIAGRAMS

By M. M. BUCKLEY.

PRICE, 2/-. **POST FREE, 2/2.**

PHOTOGRAPHY IN PRINCIPLE & PRACTICE

By S. E. BOTTOMLEY, F.R.P.S.

Price, 3/6 Net. **Post Free, 3/10.**

CARDBOARD MODELLING

(SWEDISH SYSTEM)

Containing the whole of the Swedish Models, with the addition of the Geometrical Forms

By G. C. HEWITT,

Price, 2/6 Net. **Post Free, 2/9.**

CARTON WORK

— BY — **G. C. HEWITT.**

A Graduated Course of Modelling in Paper. Suitable for Standards I., II., III.

Price, 2/-. **Post Free, 2/3.**

WOOD-CARVING

— BY — **G. C. HEWITT.**

For Day Schools, Evening Classes, and the Home.

Price, 2/- **Post Free, 2/3.**

MANUAL OF DRESSCUTTING AND MAKING

FOR ELEMENTARY TECHNICAL CLASSES.

— **By KATE WINGRAVE HARDY,** —

Price, 1/-. **Post Free, 1/2.**

SKETCHES OF ENGINE AND MACHINE DETAILS

By WALLACE BENTLEY, M.I.Mech.E.

Consulting Mechanical Engineer.

Contains over 200 Up-to-Date Detail Drawings, Fully Dimensioned, from Actual Practice.
(A Splendid Book.)

Price, 3/6 Net. **Post Free 4/-.**

F. KING & SONS, LTD., PUBLISHERS,
HALIFAX, ENGLAND.

Date Due

Library Bureau Cat. no. 1137.3

677 B722
102016
Worsted
677 B722
vol.3
GETTY CENTER LIBRARY
3 3125 00000 4792